GREE
Change for Life

Service Manual

Models: MULTI18HP230V1CO
MULTI24HP230V1CO

GREE ELECTRIC APPLIANCES,INC.OF ZHUHAI

Table of Contents

Part Ⅰ : Technical Information 1
1. Summary 1
2. Specifications 2
3. Outline Dimension Diagram 6
4. Refrigerant System Diagram 7
5. Electrical Part 8
5.1 Wiring Diagram 8
5.2 PCB Printed Diagram 10
6. Function and Control 12

Part Ⅱ : Installation and Maintenance 15
7. Notes for Installation and Maintenance 15
8. Installation Manual 17
8.1 Electrical Connections 18
8.2 Installing the Outdoor Unit 19
8.3 Installation Dimension Diagram 20
8.4 Check after Installation 21
9. Troubleshooting 22
9.1 Flashing LED of Indoor/Outdoor Unit and Primary Judgement 22
9.2 Malfunction Checking and Elimination 23
9.3 Maintenance Method for Normal Malfunction 36
10. Exploded View and Parts List 38
11. Removal Procedure 42

Appendix: 55
Appendix 1: Reference Sheet of Celsius and Fahrenheit 55
Appendix 2: Configuration of Connection Pipe 55
Appendix 3: Pipe Expanding Method 56
Appendix 4: List of Resistance for Ambient Temperature Sensor 57

Part Ⅰ : Technical Information

1. Summary

Outdoor Unit

MULTI18HP230V1CO

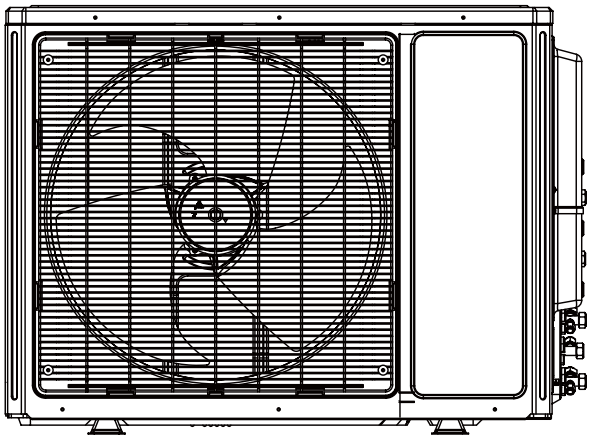

MULTI24HP230V1CO

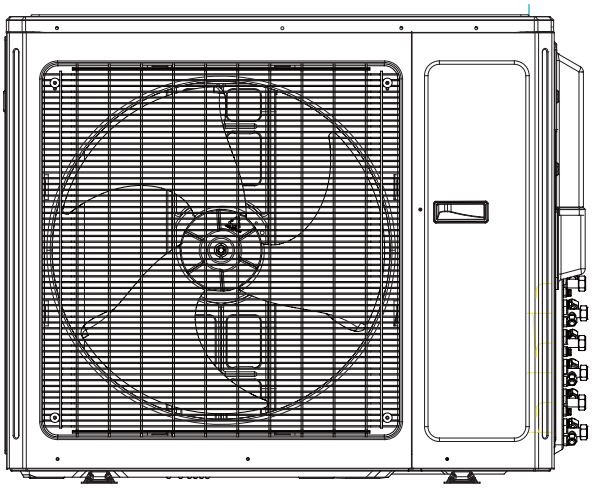

2. Specifications

Model			MULTI18HP230V1CO
Product Code			CB228W04100
Power supply	Rated Voltage	V~	208/230
	Rated Frequency	Hz	60
	Phases		1
Cooling capacity(max~min)		W	5280(2051~6155)
Heating capacity(max~min)		W	5570(2500~6624)
Cooling Power Input(max~min)		W	1650
Heating Power Input(max~min)		W	1640
Cooling Current Input		A	10.67/10.56
Heating Current Input		A	6.78/6.10
Rated Power Input		W	2800
Rated Current		A	12.48
EER		W/W	3.2
COP		W/W	3.4
Outdoor Unit	Compressor Trademark		ZHUHAI LANDA COMPRESSOR CO.,LTD
	Compressor Model		QXA-B141zF030A
	Compressor Refrigerant Oil Type		RB68EP
	Compressor Type		Inverter Rotary
	L.R.A	A	/
	Compressor Rated Load Amp (RLA)	A	7.2
	Compressor Power Input	W	1440
	Compressor Thermal Protector		1NT11L-6233
	Throttling Method		Electron expansion valve
	Cooling Operation Ambient Temperature Range	^{O}F	-0.4~118.4
	Heating Operation Ambient Temperature Range	^{O}F	-4~75.2
	Condenser Material		Aluminum Fin-copper Tube
	Condenser Pipe Diameter	inch	Φ2/7
	Rows-Fin Gap(mm)	inch	2-1/18
	Coil length (l) X height (H) X coil width (L)	inch	33 1/2X1 /12X26
	Fan Motor Speed (rpm) (H/M/L)	rpm	630
	Output of Fan Motor	W	60
	Fan Motor RLA	A	/
	Fan Motor Capacitor	μF	/
	Air Flow Volume of Outdoor Unit	CFM	1883
	Fan Type-Piece		Axial-flow
	Fan Diameter	inch	Φ20 1/2
	Defrosting Method		Automatic Defrosting
	Climate Type		T1
	Isolation		I
	Moisture Protection		IP24
	Permissible Excessive Operating Pressure for the Discharge Side	MPa	4.3
	Permissible Excessive Operating Pressure for the Suction Side	MPa	2.5
	Dimension (W/H/D)	inch	38X27 5/9X15 3/5
	Dimension of Package (L/W/H)	inch	40 2/5X18X29
	Dimension of Package(L/W/H)	inch	40 1/2X18X29 1/2
	Net Weight	lb	114.7
	Gross Weight	lb	124.6
	efrigerant Charge		R410A
	Refrigerant Charge	oz	77.6

Outdoor Unit	Cross-sectional Area of Power Cable Conductor	sq in	0.0032
	Recommended Power Cable(Core)	N	3
	Connection Pipe Connection Method	-	Flare Connection
	Not Additional Gas Connection Pipe Length	ft	16.4
	Connection Pipe Gas Additional Charge	oz/ft.	0.2
	Outer Diameter of Liquid Pipe1(GREE Allocation) (Metric)	inch	1/4
	Outer Diameter of Liquid Pipe2(GREE Allocation) (Metric)	inch	1/4
	Outer Diameter of Gas Pipe1(GREE Allocation) (Metric)	inch	3/8
	Outer Diameter of Gas Pipe2(GREE Allocation) (Metric)	inch	3/8
	Connection Pipe Max. Height Distance(indoor and indoor)	ft	32.8
	Connection Pipe Max. Height Distance(indoor and outdoor and indoor up)	ft	32.8
	Connection Pipe Max. Height Distance(indoor and outdoor and outdoor up)	ft	32.8
	Max. equivalent connection pipe length(outdoor to last indoor)	ft	32.8
	Connection Pipe Max. Length Distance(total lenght)	ft	65.6

The above data is subject to change without notice; please refer to the nameplate of the unit.

Model			MULTI24HP230V1CO
Product Code			CB228W04200
Power supply	Rated Voltage	V~	208/230
	Rated Frequency	Hz	60
	Phases		1
Cooling capacity(max~min)		W	7620(2198~9672)
Heating capacity(max~min)		W	8500(2198~7500)
Cooling Power Input(max~min)		W	2400
Heating Power Input(max~min)		W	2350
Cooling Current Input		A	10.65
Heating Current Input		A	10.43
Rated Power Input		W	4550
Rated Current		A	20.19
EER		W/W	3.0
COP		W/W	3.5
Outdoor Unit	Compressor Trademark		ZHUHAI LANDA COMPRESSOR CO.,LTD
	Compressor Model		QXAS-D23zX090B
	Compressor Refrigerant Oil Type		RB68EP
	Compressor Type		Inverter Rotary
	L.R.A	A	/
	Compressor Rated Load Amp (RLA)	A	11.5
	Compressor Power Input	W	2550
	Compressor Thermal Protector		1NT11L-6233
	Throttling Method		Electron expansion valve
	Cooling Operation Ambient Temperature Range	^{O}F	-0.4~118.4
	Heating Operation Ambient Temperature Range	^{O}F	-4~75.2
	Condenser Material		Aluminum Fin-copper Tube
	Condenser Pipe Diameter	inch	Φ2/7
	Rows-Fin Gap(mm)	inch	2-1/18
	Coil length (l) X height (H) X coil width (L)	inch	38 2/3X1 1/2X29 4/9
	Fan Motor Speed (rpm) (H/M/L)	rpm	800
	Output of Fan Motor	W	90
	Fan Motor RLA	A	/
	Fan Motor Capacitor	μF	/
	Air Flow Volume of Outdoor Unit	CFM	2354
	Fan Type-Piece		Axial-flow
	Fan Diameter	inch	Φ21 2/3-2 3/5
	Defrosting Method		Automatic Defrosting
	Climate Type		T1
	Isolation		I
	Moisture Protection		IP24
	Permissible Excessive Operating Pressure for the Discharge Side	MPa	4.3
	Permissible Excessive Operating Pressure for the Suction Side	MPa	2.5
	Dimension (W/H/D)	inch	38 4/7X31 1/9X17 1/3
	Dimension of Package (L/W/H)	inch	42 1/2X19X33
	Dimension of Package(L/W/H)	inch	42 2/3X19 1/5X33 2/3
	Net Weight	lb	153.2
	Gross Weight	lb	164.3
	efrigerant Charge		R410A
	Refrigerant Charge	oz	77.6

Outdoor Unit	Cross-sectional Area of Power Cable Conductor	sq in	0.0051
	Recommended Power Cable(Core)	N	3
	Connection Pipe Connection Method	-	Flare Connection
	Not Additional Gas Connection Pipe Length	ft	16.4
	Connection Pipe Gas Additional Charge	oz/ft.	0.2
	Outer Diameter of Liquid Pipe1(GREE Allocation) (Metric)	inch	1/4
	Outer Diameter of Liquid Pipe2(GREE Allocation) (Metric)	inch	1/4
	Outer Diameter of Liquid Pipe2(GREE Allocation) (Metric)	inch	1/4
	Outer Diameter of Gas Pipe1(GREE Allocation) (Metric)	inch	3/8
	Outer Diameter of Gas Pipe2(GREE Allocation) (Metric)	inch	3/8
	Outer Diameter of Gas Pipe2(GREE Allocation) (Metric)	inch	3/8
	Connection Pipe Max. Height Distance(indoor and indoor)	ft	32.8
	Connection Pipe Max. Height Distance(indoor and outdoor and indoor up)	ft	32.8
	Connection Pipe Max. Height Distance(indoor and outdoor and outdoor up)	ft	32.8
	Max. equivalent connection pipe length(outdoor to last indoor)	ft	65.6
	Connection Pipe Max. Length Distance(total lenght)	ft	196.8

The above data is subject to change without notice; please refer to the nameplate of the unit.

3. Outline Dimension Diagram

MULTI18HP230V1CO

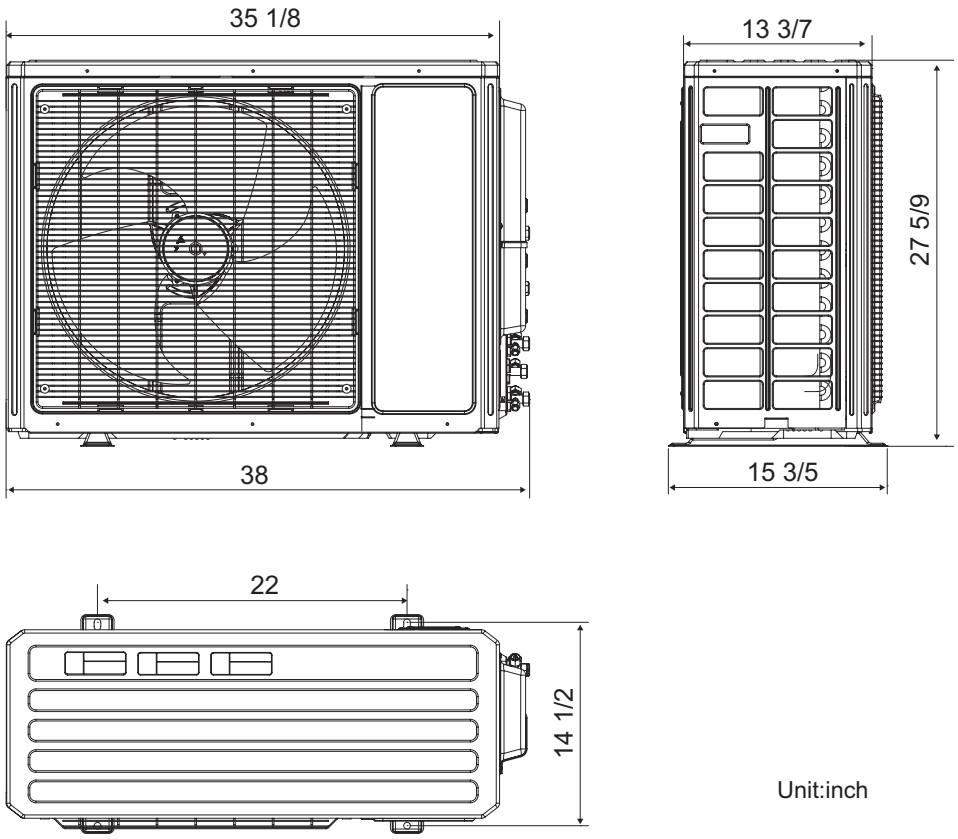

Unit:inch

MULTI24HP230V1CO

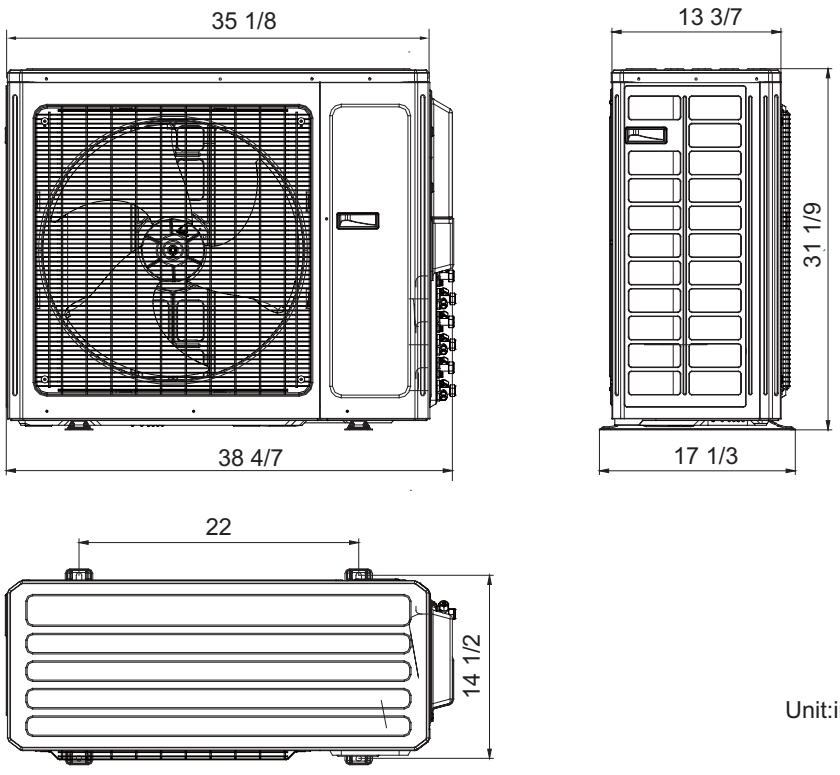

Unit:inch

4. Refrigerant System Diagram

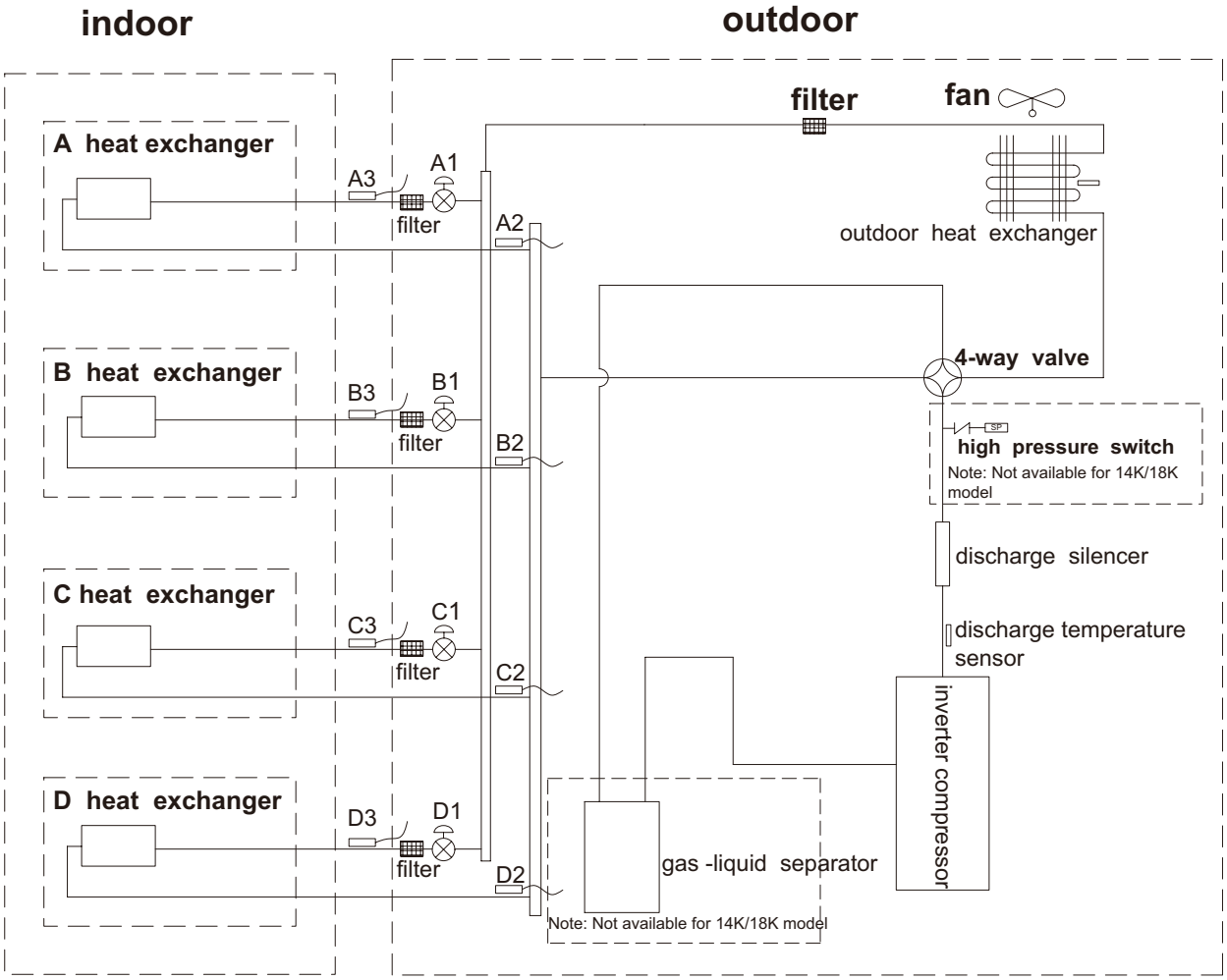

A1:A-unit electronic expansion valve B1:B-unit electronic expansion valve
C1:C-unit electronic expansion valve D1:D-unit electronic expansion valve
A2:A-unit gas pipe temperature sensor B2:B-unit gas pipe temperature sensor
C2:C-unit gas pipe temperature sensor D2:D-unit gas pipe temperature sensor
A3:A-unit liquid pipe temperature sensor B3:B-unit liquid pipe temperature sensor
C3:C-unit liquid pipe temperature sensor D3:D-unit liquid pipe temperature sensor

5. Electrical Part

5.1 Wiring Diagram

●Instruction

Symbol	Symbol Color	Symbol	Symbol Color	Symbol	Name
WH	White	GN	GREEN	COMP	Compressor
YE	Yellow	BN	Brown	⏚	Grouding wire
RD	Red	BU	Blue		
YEGN	Yellow/Green	BK	Black		
VT	Violet	OG	Orange		

● Indoor Unit

MULTI18HP230V1CO

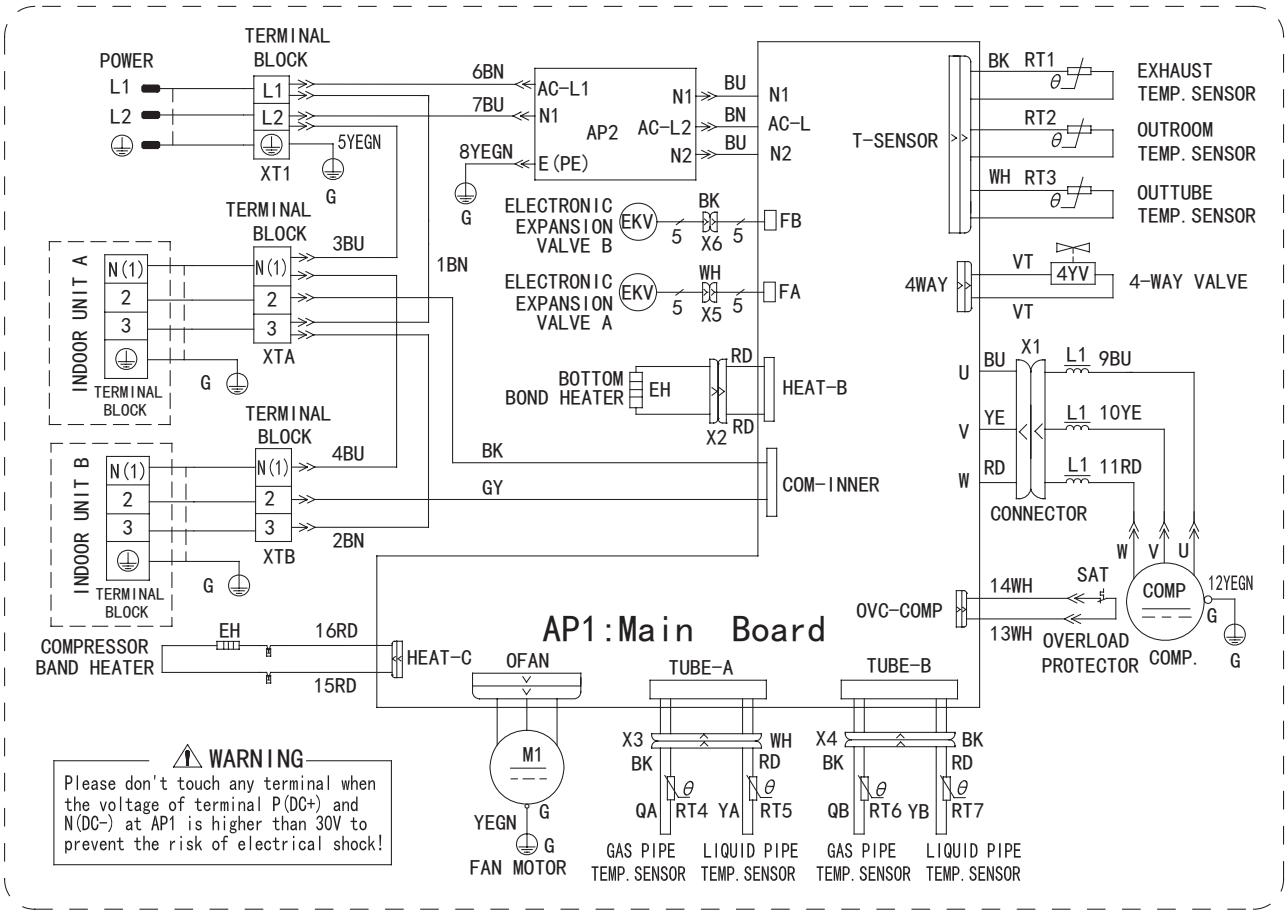

MULTI24HP230V1CO

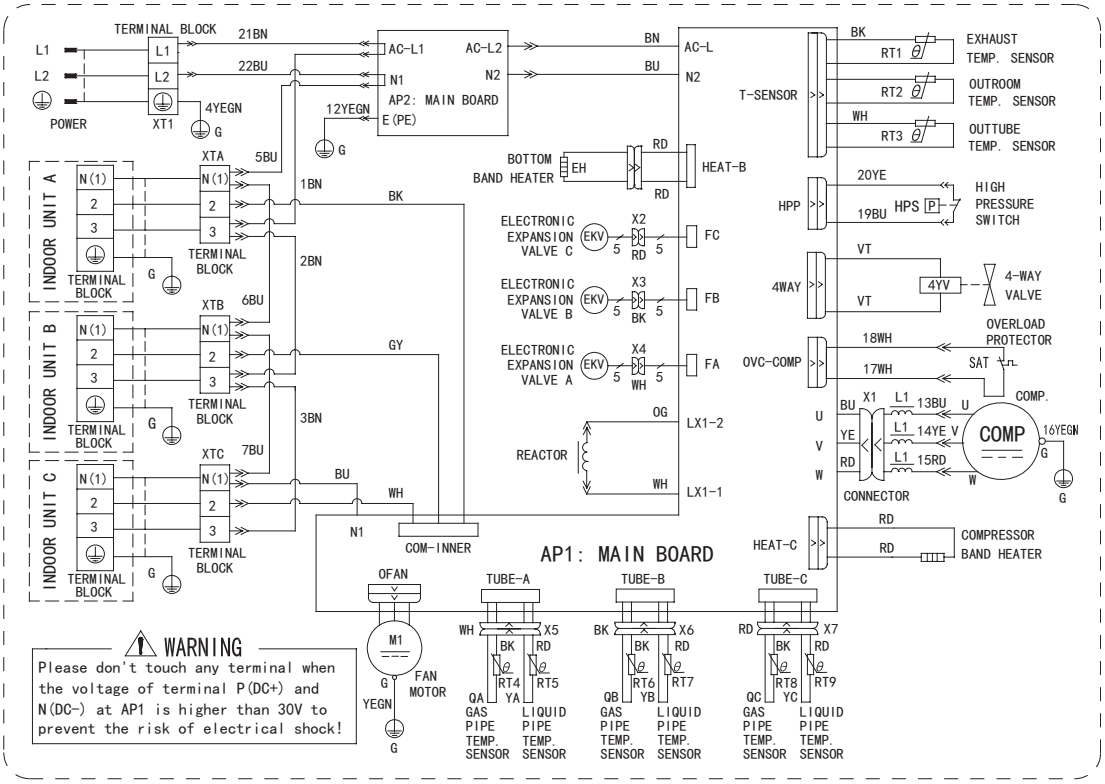

These circuit diagrams are subject to change without notice, please refer to the one supplied with the unit.

5.2 PCB Printed Diagram

MULTI18HP230V1CO

● **TOP VIEW**

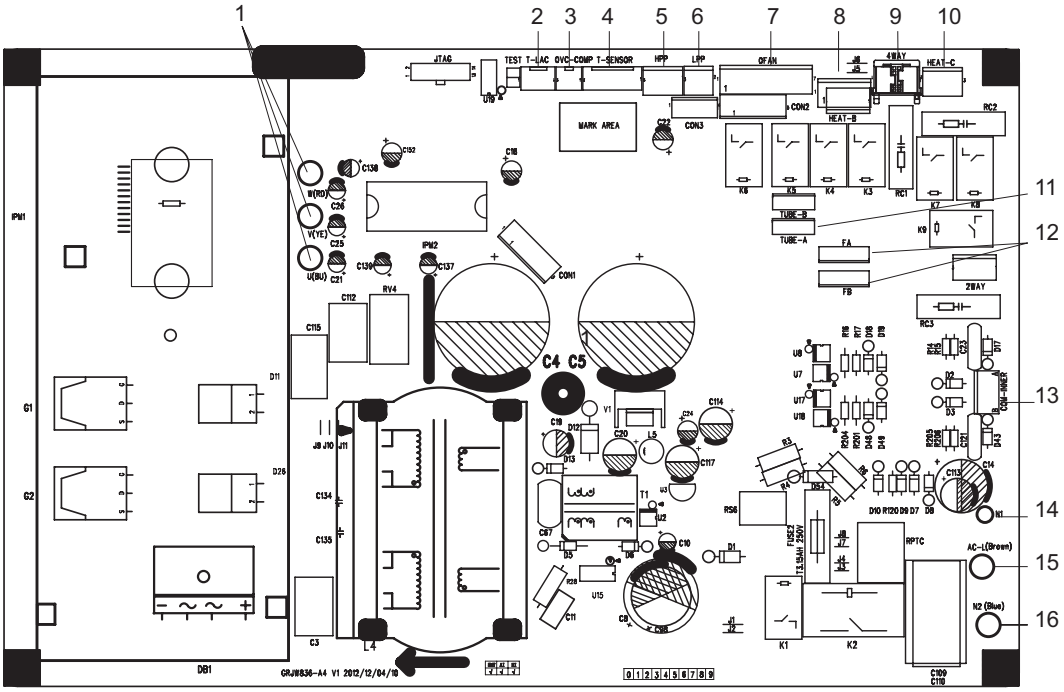

1	Terminal of compressor
2	Terminal of low-temperature cooling temperature sensor
3	Overload protection terminal of compressor
4	Temperature sensor terminal of outdoor unit
5	High pressure protection terminal
6	Low pressure protection terminal
7	Terminal of outdoor unit
8	Electric heating belt terminal of chassis
9	Terminal of 4-way valve
10	Electric heating belt terminal of compressor
11	Terminal of temperature sensor wire for liquid valve and gas valve
12	Terminal of electronic expansion valve
13	Terminal of communication wire for indoor unit and outdoor unit
14	Neutral wire terminal for communication
15	Live wire terminal
16	Neutral wire terminal

● **BOTTOM VIEW**

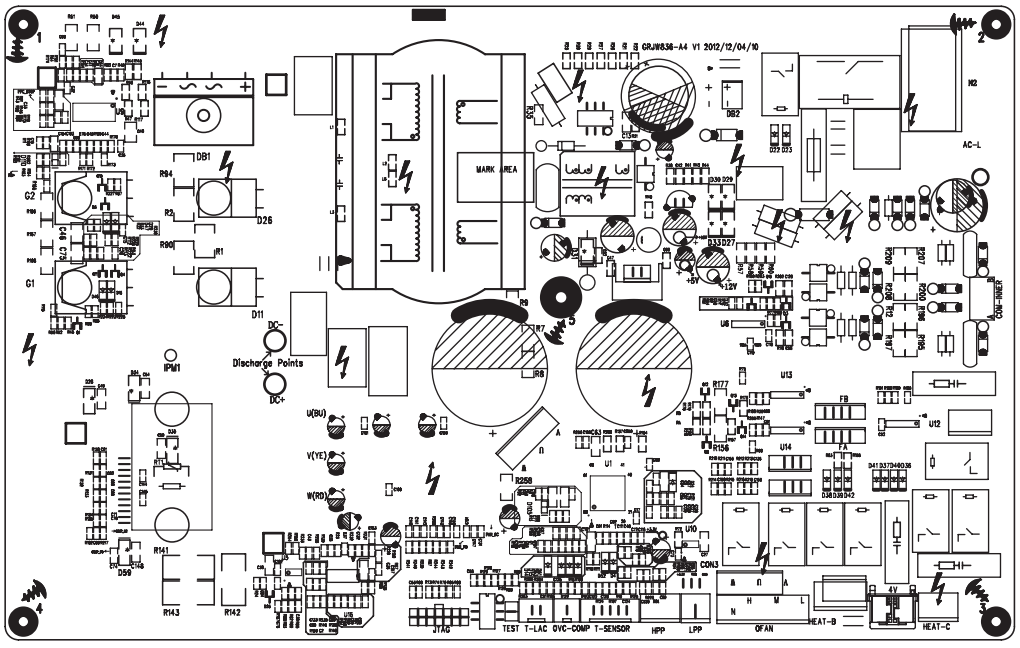

MULTI24HP230V1CO

● TOP VIEW

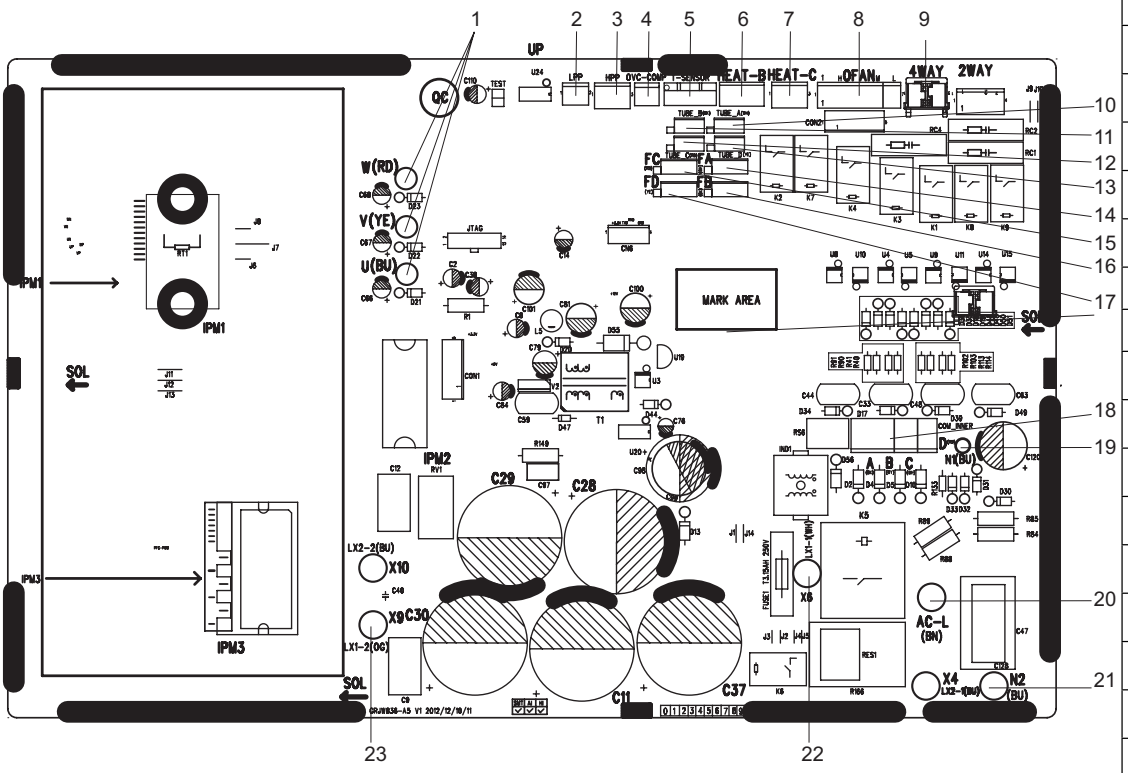

1	Terminal of compressor
2	Low pressure protection terminal
3	High pressure protection terminal
4	Overload protection terminal of compressor
5	Temperature sensor terminal of outdoor unit
6	Electric heating terminal of chassis
7	Electric heating terminal of compressor
8	Terminal of outdoor unit
9	Terminal of 4-way valve
10	Temperature sensor for liquid valve and gas valve for unit A
11	Temperature sensor for liquid valve and gas valve for unit B
12	Temperature sensor for liquid valve and gas valve for unit C
13	Temperature sensor for liquid valve and gas valve for unit D
14	Electronic expansion vale for unit A
15	Electronic expansion vale for unit C
16	Electronic expansion vale for unit B
17	Electronic expansion vale for unit D
18	Communication wire with indoor unit
19	Neutral wire for counication
20	Live wire
21	Neutral wire
22	Reactor wire 1
23	Reactor wire 2

● BOTTOM VIEW

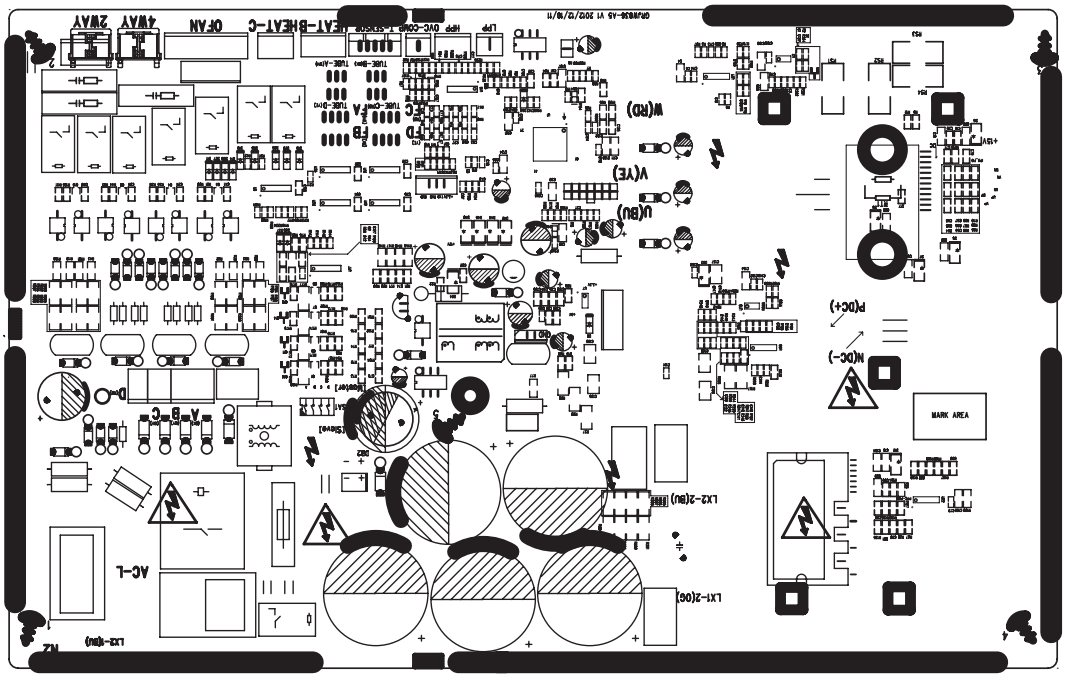

6. Function and Control

1 Basic functions of the system

1.1 Cooling Mode

1.1.1 Cooling conditions and process:

If the compressor is in stop status and start the unit for cooling operation, when one of the indoor units reaches the cooling operation condition, the unit start cooling operation; in this case, the electronic expansion valve, the outdoor fan and the compressor start operation.

1.1.2 Stop in cooling operation

1.1.2.1 Compressor stops

The compressor stops immediately, the outdoor fan stops after 1min.

1.1.2.2 Some of the indoor units reach the stop condition (the compressor does not stop)

The compressor operates immediately according to the required frequency. For the indoor unit with no requirement, the corresponding electronic expansion valve is closed to OP.

1.1.3 Cooling mode transfers to heating mode

When the unit transfers to heating mode, the 4-way valve is energized after the compressor stops for 2min. The other disposals are the same as stopping in cooling mode.

1.1.4 4-way valve: in this mode, the 4-way valve is closed.

1.1.5 Outdoor fan control in cooling mode

The outdoor fan starts before 5s of the starting of compressor. The outdoor fan will run in high speed for 3min after starting and then it will run in set speed. The fan shall run at every speed for at least 80s. (When the quantity of running indoor unit is changed, the unit will enter the control described in 1.3.5.1 and 1.3.5.2);

When the compressor stops, the outdoor fan runs at present speed and stops after 1min.

1.2 Dry Mode

1.2.1 The dry conditions and process are the same as those in cooling mode;

1.2.2 The status of 4-way valve: closed;

1.2.3 The temperature setting range: 16 ~ 30℃;

1.2.4 Protection function: the same as those in cooling mode;

1.2.5 In dry mode, the maximum value A of the capacity requirement percentage of single unit is 90% of that in cooling mode.

The open condition of the electronic expansion valve, outdoor fan and compressor is the same as those in cooling mode.

1.3 Heating Mode

1.3.1 Cooling conditions and process:

When one of the indoor units reaches the heating operation condition, the unit starts heating operation.

1.3.2 Stop in heating operation:

1.3.2.1 When all the indoor units reach the stop condition, the compressor stops and the outdoor fan stops after 1min;

1.3.2.2 Some of the indoor units reach the stop condition

The compressor reduces the frequency immediately and operates according to the required frequency;

1.3.2.3 Heating mode transfers to cooling mode(dry mode), fan mode

a. The compressor stops; b. the power of 4-way valve is cut off after 2min; c. the outdoor fan stops after 1min; d. the status of 4-way valve: energized;

1.3.3 Outdoor fan control in heating mode

The outdoor fan starts before 5s of the starting of compressor and then it will run in high speed for 40s;

The fan shall run at every speed for at least 80s;

When the compressor stops, the outdoor fan stops after 1min.

1.3.4 Defrosting function

When the defrosting condition is met, the compressor stops; the electronic expansion valve of all indoor units open in big angle; the outdoor fan stops after 40s of the stop of compressor, meanwhile, the 4-way valve reverses the direction; after the 4-way valve reverses the direction, the compressor starts; then begin to calculate the time of defrosting, the frequency of the compressor rises to reach the defrosting frequency.

1.3.5 Oil-returned control in heating mode

1.3.5.1 Oil-returned condition

The whole unit is operating in low frequency for a long time

1.3.5.2 Oil-returned process in heating mode

The indoor unit displays “H1”

1.3.5.3 Oil-returned finished condition in heating mode

The duration reaches 5min

1.4 Fan Mode

The compressor, the outdoor fan and the 4-way valve are closed; temperature setting range is 16～30℃.

2. Protection Function

2.1 Mode Conflict Protection of indoor unit

When the setting mode is different of different indoor unit, the unit runs in below status:

a. The mode of the first operating indoor unit is the basic mode, then compare the mode of the other indoor units to see if there is a conflict. Cooling mode (dry mode) is in conflict with heating mode.

b. Fan mode is in conflict with heating mode and the heating mode is the basic mode. No matter which indoor unit operates first, the unit will run in heating mode.

2.2 Overload protection function

When the tube temperature is a little low, the compressor raises the operation frequency; when the tube temperature is a little high, the compressor frequency is restricted or lows down the operation frequency; when the tube temperature is too high, the compressor protection stops running.

If the discharge temperature protection continuously appears for 6 times, the compressor can’t resume running. The compressor can resume running after cutting off the power and then putting through the power. (if the running time of the compressor is longer than 7min, the protection times record will be cleared)

2.3 Discharge Protection Function

When the discharge temperature is a little low, the compressor raises the operation frequency; when the discharge temperature is a little high, the compressor frequency is restricted or lows down the operation frequency; when the discharge temperature is too high, the compressor protection stops running.

If the discharge temperature protection continuously appears for 6 times, the compressor can’t resume running. The compressor can resume running after cutting off the power and then putting through the power. (if the running time of the compressor is longer than 7min, the protection times record will be cleared)

2.4 Communication malfunction

Detection of the quantity of installed indoor units:

After 3min of energizing, if the outdoor unit does not receive the communication data of certain indoor unit, the outdoor unit will judge that indoor unit is not installed and will treat it as it is not installed. If the outdoor unit receives the communication data of that indoor unit later, the outdoor unit will treat that unit as it is installed.

2.5 Overcurrent Protection

a. Overcurrent protection of complete unit; b. phase wire current protection; c. compressor phase current protection

2.6 Compressor high-pressure protection

2.6.1 When the high-pressure switch is detected cut off for 3s continuously, the compressor will enter high-pressure protection as it stops when reaching set temperature. Meanwhile, the outdoor unit will send the signal of “high-pressure protection” to the indoor units;

2.6.2 After the appearance of high-pressure protection, when the high-pressure switch is detected closed for 6s continuously, the compressor can resume running only after cutting off the power and then putting through the power.

2.7 Compressor overload protection

If the compressor overload switch is detected having movement, the indoor unit will display the corresponding malfunction as it stops when the indoor temperature reaching set temperature. When the compressor stops for more than 3min and the compressor overload switch is reset, the unit will resume operation status automatically. If the protection appears for more than 6 times (if the running time of the compressor is longer than 30min, the protection times record will be cleared), the unit can not resume operation status automatically, but can resume running only after cutting off the power and then putting through the power.

2.8 Compressor Phase-lacking Protection

When the compressor starts, if one of the three phases is detected open, the compressor will enter phase-lacking protection. The malfunction will be cleared after 1min, the unit will restart and then detect if there is still has phase-lacking protection. If the phase-lacking protection is detected for 6 times continuously, the compressor will not restart but can resume running only after cutting off the power and then putting through the power. If the running time of the compressor is longer than 7min, the protection times record will be cleared.

2.9 IPM Protection

2.9.1 When the IMP module protection is detected, the unit will stop as the indoor temperature reaching set temperature, PFC is closed, display IMP protection malfunction. After the compressor stops for 3min, the unit will resume operation status automatically; if the IMP protection is detected for more than 6 times continuously (If the running time of the compressor is longer than 7min, the protection times record will be cleared), the system will stop and send the signal of module protection to indoor unit. The unit can not resume operation status automatically, but can resume running only after cutting off the power and then putting through the power.

2.9.2 IMP module overheating protection

2.9.2.1 When $T_{IMP} > 85℃$, prohibit to raise frequency;

2.9.2.2 When $T_{IMP} \geq 90℃$, the operation frequency of compressor lows down by 15% every 90s according to the present capacity requirement of the complete unit. It will keep 90s after lowing down the frequency. After lowing down the frequency, if $T_{IMP} \geq 90℃$, the unit will circulate the above movement until reaching the minimum frequency; if $85℃ < T_{IMP} < 90℃$, the unit will run at this frequency; when $T_{IMP} \leq 85℃$, the unit will run at the frequency according to the capacity requirement;

2.9.2.3 When $T_{IMP} \geq 95℃$, the compressor stops. After the compressor stops for 3min, if $T_{IMP} < 85℃$, the compressor and the outdoor fan will resume operation.

Part Ⅱ : Installation and Maintenance

7. Notes for Installation and Maintenance

Safety Precautions: Important!

Please read the safety precautions carefully before installation and maintenance.
The following contents are very important for installation and maintenance.

Please follow the instructions below.

●The installation or maintenance must accord with the instructions.
●Comply with all national electrical codes and local electrical codes.
●Pay attention to the warnings and cautions in this manual.
●All installation and maintenance shall be performed by distributor or qualified person.
●All electric work must be performed by a licensed technician according to local regulations and the instructions given in this manual.
●Be caution during installation and maintenance. Prohibit incorrect operation to prevent electric shock, casualty and other accidents.

Warnings

Electrical Safety Precautions:

1. Cut off the power supply of air conditioner before checking and maintenance.
2. The air condition must apply specialized circuit and prohibit share the same circuit with other appliances.
3. The air conditioner should be installed in suitable location and ensure the power plug is touchable.
4. Make sure each wiring terminal is connected firmly during installation and maintenance.
5. Have the unit adequately grounded. The grounding wire can't be used for other purposes.
6. Must apply protective accessories such as protective boards, cable-cross loop and wire clip.
7. The live wire, neutral wire and grounding wire of power supply must be corresponding to the live wire, neutral wire and grounding wire of the air conditioner.
8. The power cord and power connection wires can't be pressed by hard objects.
9. If power cord or connection wire is broken, it must be replaced by a qualified person.
10. If the power cord or connection wire is not long enough, please get the specialized power cord or connection wire from the manufacture or distributor. Prohibit prolong the wire by yourself.
11. For the air conditioner without plug, an air switch must be installed in the circuit. The air switch should be all-pole parting and the contact parting distance should be more than 1/8 inch.
12. Make sure all wires and pipes are connected properly and the valves are opened before energizing.
13. Check if there is electric leakage on the unit body. If yes, please eliminate the electric leakage.
14. Replace the fuse with a new one of the same specification if it is burnt down; don't replace it with a cooper wire or conducting wire.
15. If the unit is to be installed in a humid place, the circuit breaker must be installed.

Installation Safety Precautions:

1. Select the installation location according to the requirement of this manual.(See the requirements in installation part)
2. Handle unit transportation with care; the unit should not be carried by only one person if it is more than 44.09lb.
3. When installing the indoor unit and outdoor unit, a sufficient fixing bolt must be installed; make sure the installation support is firm.
4. Ware safety belt if the height of working is above 78 3/4 inch.
5. Use equipped components or appointed components during installation.
6. Make sure no foreign objects are left in the unit after finishing installation.

Refrigerant Safety Precautions:

1. Avoid contact between refrigerant and fire as it generates poisonous gas; Prohibit prolong the connection pipe by welding.
2. Apply specified refrigerant only. Never have it mixed with any other refrigerant. Never have air remain in the refrigerant line as it may lead to rupture or other hazards.
3. Make sure no refrigerant gas is leaking out when installation is completed.
4. If there is refrigerant leakage, please take sufficient measure to minimize the density of refrigerant.
5. Never touch the refrigerant piping or compressor without wearing glove to avoid scald or frostbite.

Improper installation may lead to fire hazard, explosion, electric shock or injury.

Main Tools for Installation and Maintenance

1. Level meter, measuring tape	2. Screw driver	3. Impact drill, drill head, electric drill
4. Electroprobe	5. Universal meter	6. Torque wrench, open-end wrench, inner hexagon spanner
7. Electronic leakage detector	8. Vacuum pump	9. Pressure meter
10. Pipe pliers, pipe cutter	11. Pipe expander, pipe bender	12. Soldering appliance, refrigerant container

8. Installation Manual

Installation procedures

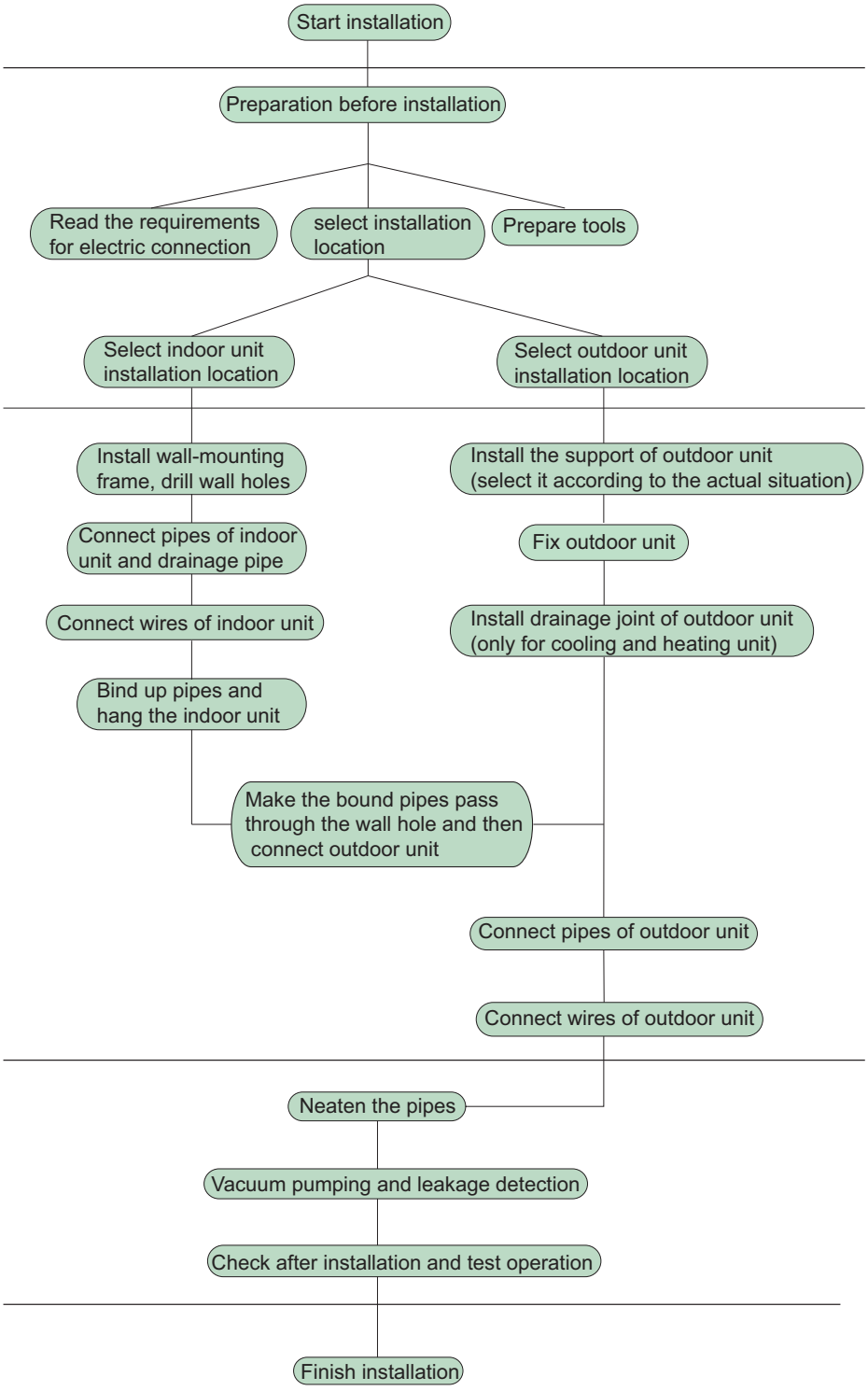

Note: this flow is only for reference; please find the more detailed installation steps in this section.

8.1 Electrical Connections

1. Remove the handle at the right side plate of the outdoor unit (one screw).
2. Remove the cable clamp, connect the power connection cable with the terminal at the row of connection and fix the connection. The fitting line distributing must be consistent with the indoor unit. terminal of line bank. Wiring should meet that of indoor unit.
3. Fix power connection wire by wire clamp.
4. Ensure wire has been fixed well.
5. Install the handle.

⚠ Including an air switch with suitable capacity, please note the following table. Air switch should be included magnet buckle and heating buckle function, it can protect the circuit-short and overload. (Caution: please do not use thefuse only for protect the circuit)

⚠ An all-pole disconnection switch having a contact separation of at least 3mm in all pole should be connected in fixed wiring.

⚠ Wrong wire connection may cause malfunction of some electric components.After fixing cable, ensure that leads between connection to fixed point have some space.

⚠ The connection pipes and the connectiong wirings of the unit A and unit B must be corresponding to each other respective.

⚠ The appliance shall be installed in accordance with national wiring regulations.

Note: the above figures are only intended to be a simple diagram of the appliance and may not correspond to the appearance of the units that have been purchased.

MULTI18HP230V1CO

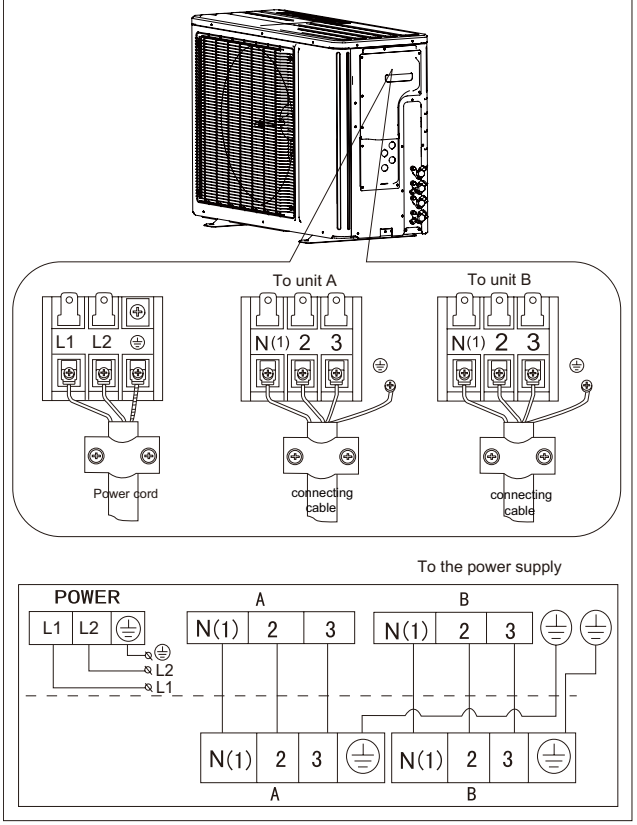

MULTI24HP230V1CO

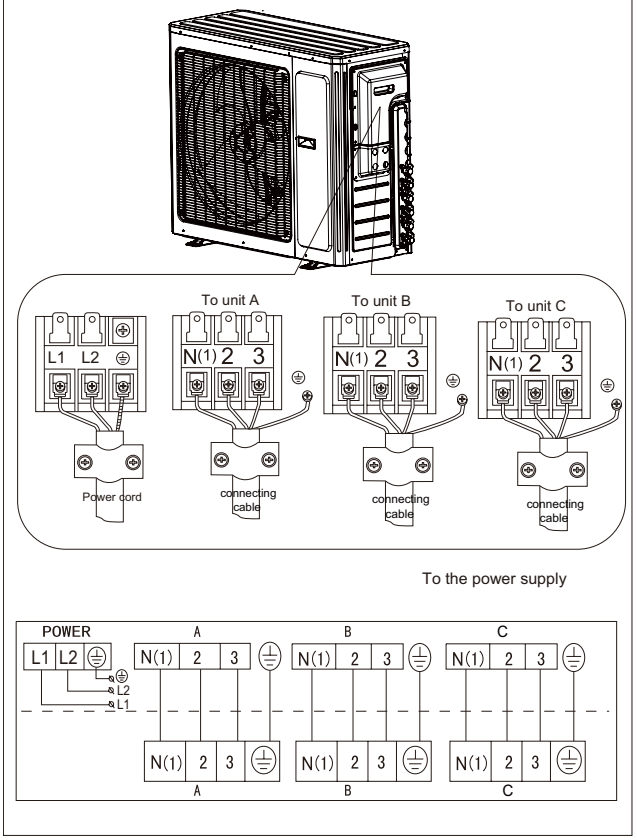

8.2 Installing the Outdoor Unit

Location

Use bolts to secure the unit to a flat, solid floor.

When mounting the unit on a wall or the roof, make sure the support is firmly secured so that it cannot move in the event of intense vibrations or a strong wind.

Do not install the outdoor unit in pits or air vents

Installing the pipes

Use suitable connecting pipes and equipment for the refrigerant R410A.

Models(ft)	18K	24K
Max. connection pipe length(ft)	65.6	196.8
Max. connection pipe length(Simpleone indoor unit)(ft)	32.8	65.6

The refrigerant pipes must not exceed the maximum heights 16.4ft(18K) or 32.8ft(24K).

Wrap all the refrigerant pipes and joints.

Tighten the connections using two wrenches working in opposite directions.

Caution: Installation Must be Performed in Accordance with the NEC/CEC by Authorized Personnel Only.

Humid air left inside the refrigerant circuit can cause compressor malfunction. After having connected the indoor and outdoor units, bleed the air and humidity from the refrigerant circuit using a vacuum pump.

(1) Unscrew and remove the caps from the 2-way and 3-way valves.
(2) Unscrew and remove the cap from the service valve.
(3) Connect the vacuum pump hose to the service valve.
(4) Operate the vacuum pump for 10-15 minutes until an absolute vacuum of 10 mm Hg has been reached.
(5) With the vacuum pump still in operation, close the low-pressure knob on the vacuum pump coupling. Stop the vacuum pump.
(6) Open the 2-way valve by 1/4 turn and then close it after 10 seconds. Check all the joints for leaks using liquid soap or an electronic leak device.
(7) Turn the body of the 2-way and 3-way valves. Disconnect the vacuum pump hose.
(8) Replace and tighten all the caps on the valves.

Hex nut diameter(inch)	Tightening torque(ft·lbf)
Φ1/4	11.10~4.75
Φ3/8	20.12~29.50
Φ1/2	33.19~40.56
Φ5/8	44.24~47.94
Φ3/4	51.32~55.31

18K unit need to be installed the indoor unit

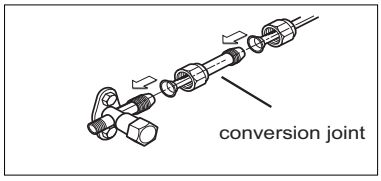

Install the drain fitting and the drain hose(for model with heat pump only)

Condensation is produced and flows from the outdoor unit when the appliance is operating in the heating mode. In order not to disturb neighbours and to respect the environment, install a drain fitting and a drain hose to channel the condensate

water. Install the drain fitting and rubber washer on the outdoor unit chassis and connect a drain hose to it as shown in the figure.

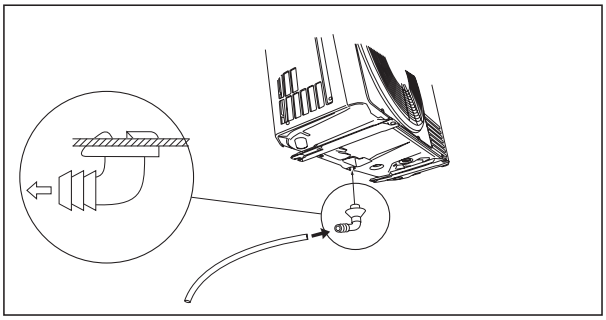

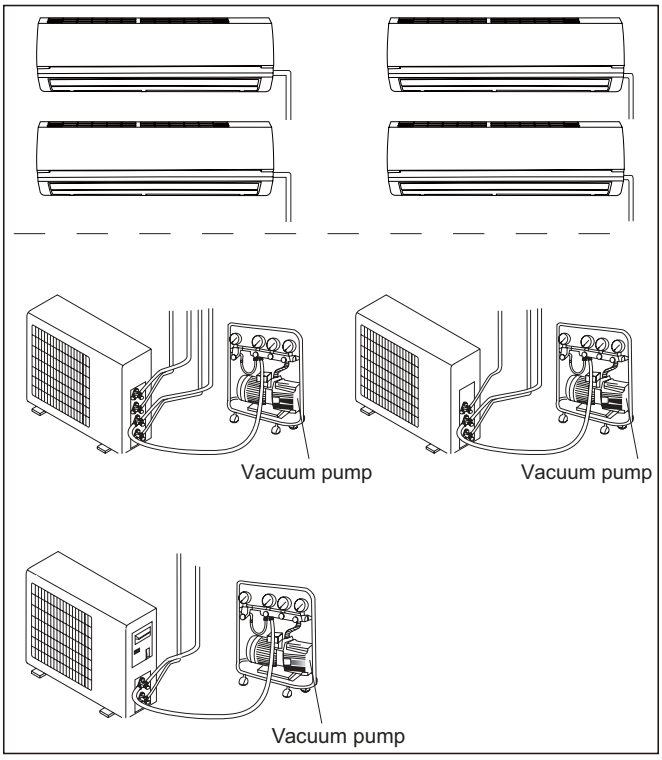

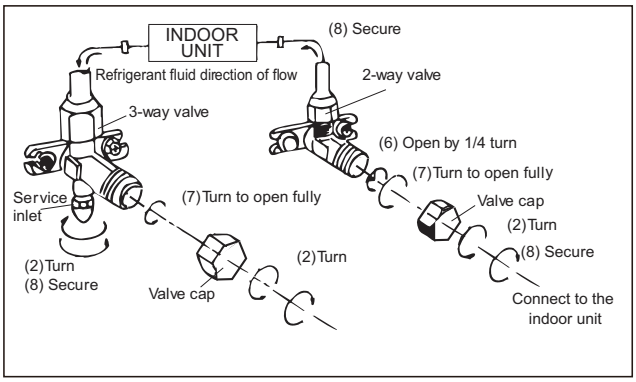

8.3 Installation Dimension Diagram

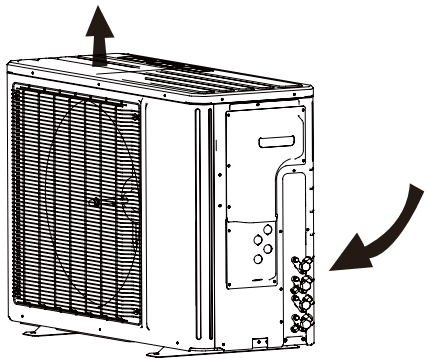

⚠ Use suitable instruments for the refrigerant R410A.

- Do not use any other refrigerant than R410A.

⚠ Do not use mineral oils to clean the unit.

⚠ The installation must be done by trained and qualified service personnel with reliability according to this manual.

⚠ Contact service center before installation to avoid the malfunction due to unprofessional installation.

⚠ When picking up and moving the units, you must be guided by trained and qualified person.

⚠ Ensure that the recommended space is left around the appliance .

MULTI18HP230V1CO

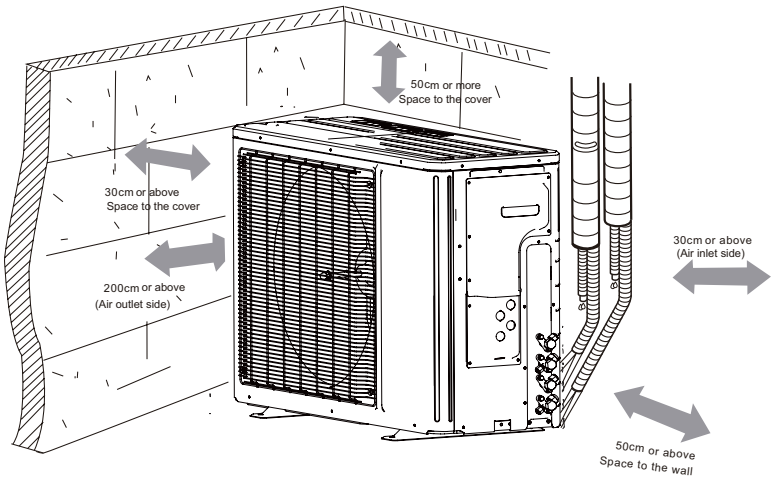

MULTI24HP230V1CO

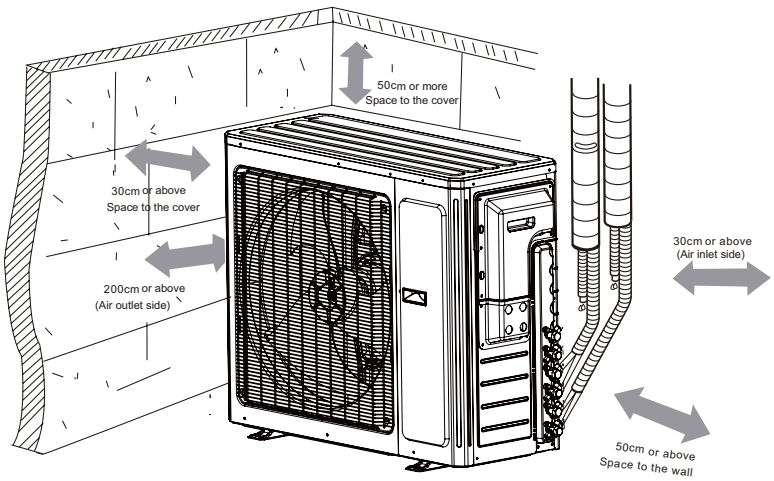

8.4 Check after Installation

Check Items	Problems Owing to Improper Installation
Is the installation reliable?	The unit may drop, vibrate or make noises
Has the gas leakage been checked?	May cause unsatisfactory cooling (heating) effect
Is the thermal insulation of the unit sufficient?	May cause condensation and water dropping
Is the drainage smooth?	May cause condensation and water dropping
Does the power supply voltage accord with the rated voltage specified on the nameplate?	The unit may bread down or the components may be burned out
Are the lines and pipelines correctly installed?	The unit may bread down or the components may be burned out
Has the unit been safely grounded?	Risk of electrical leakage
Are the models of lines in conformity with requirements?	The unit may bread down or the components may be burned out
Are there any obstacles near the air inlet and outlet of the indoor and outdoor units?	The unit may bread down or the components may be burned out
Have the length of refrigerating pipe and refrigerant charge amount been recorded?	It is not easy to decide the charge amount of refrigerant.

9. Troubleshooting

9.1 Flashing LED of Indoor/Outdoor Unit and Primary Judgement

1. Requirement of malfunction display

When several malfunctions happen at the same time, malfunction codes will be displayed circularly.

2. Malfunction display method

(1) Hardware malfunction: it will be displayed immediately, please refer to “Malfunction status sheet”;

(2) Operation status: it will be displayed immediately, please refer to “Malfunction status sheet”;

(3) Other malfunction: It will be displayed after the compressor has been stopped for 200s, please refer to “Malfunction status sheet”.

(Note: when the compressor starts up again, malfunction display waiting time (200s) will be cleared.)

3. Malfunction display control

Indoor unit displays malfunction code as shown in the sheet below. ODU communication light will be off for 1s and then blink for 1s circularly.

4. Viewing malfunction code through remote controller

Enter viewing malfunction code: pressing light button for 6 times within 3S to view malfunction code;

Exit viewing malfunction code: pressing light button for 6 times within 3S or after the malfunction code is displayed for 5min.

Malfunction status sheet		
Malfunction name	Malfunction type	Nixie tube
Zero cross detection circuit malfunction(for indoor unit)	Hardware malfunction	U8
Malfunction protection of jumper cap(for indoor unit)	Hardware malfunction	C5
Feedback of without IDU motor(for indoor unit)	Hardware malfunction	H6
Indoor ambient temperature sensor is open/short circuited	Hardware malfunction	F1
Indoor evaporator temperature sensor is open/short circuited	Hardware malfunction	F2
Liquid valve temperature sensor is open/short circuited	Hardware malfunction	b5
Gas valve temperature sensor is open/short circuited	Hardware malfunction	b7
Modular temperature sensor is open/short circuited	Hardware malfunction	P7
Outdoor ambient temperature sensor is open/short circuited	Hardware malfunction	F3
Outdoor condenser middle pipe temperature sensor is open/short circuited	Hardware malfunction	F4
Outdoor discharge temperature sensor is open/short circuited	Hardware malfunction	F5
Communication malfunction	Hardware malfunction	E6
Malfunction of phase current detection circuit for compressor	Hardware malfunction	U1
Module high temperature protection	Viewing malfunction code through remote controller within 200s; displayed directly on nixietube after 200s	P8
Refrigerant lacking or blockage protection of system (not available for residential ODU)		F0
Charging malfunction of capacitor	Hardware malfunction	PU
High pressure protection of system	Hardware malfunction	E1
Low pressure protection of system (reserved)	Hardware malfunction	E3

Compressor overload protection	Viewing malfunction code through remote controller within 200s; displayed directly on nixietube after 200s	H3
Indoor unit and outdoor unit do not match	Hardware malfunction	LP
Malfunction of memory chip	Hardware malfunction	EE
Wrong connection of communication wire or malfunction of electronic expansion valve	Hardware malfunction	dn
Malfunction protection of outdoor fan 1	Hardware malfunction	L3
Detection status of wrong connection of communication wire or malfunction of electronic expansion valve	Operation status	dd
Mode conflict	Operation status	E7
Refrigerant recycling mode	Operation status	Fo
X-fan	Operation status	AL
Defrosting or oil return in heating mode	Operation status	H1
Start failure of compressor	Viewing malfunction code through remote controller within 200s; displayed directly on nixietube after 200s	Lc
High discharge temperature protection of compressor		E4
Overload protection		E8
Whole unit overcurrent protection		E5
Compressor phase current protection		P5
Compressor desynchronizing		H7
Compressor phase-lacking/phase-inverse protection		Ld
IPM modular protection		H5
DC bus-bar low voltage protection		PL
DC bus-bar high voltage protection		PH
PFC protection		HC
The four-way valve is abnormal		U7

9.2 Malfunction Checking and Elimination

Note: discharge the position in below pictures with discharge resistance after open the top cover and check if the voltage is below 20V with universal meter, then begin to check.

18K:

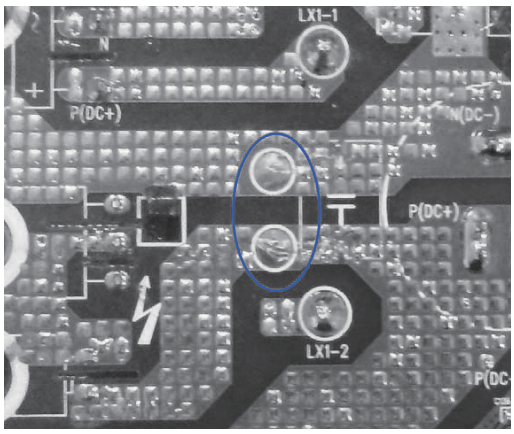

24K:

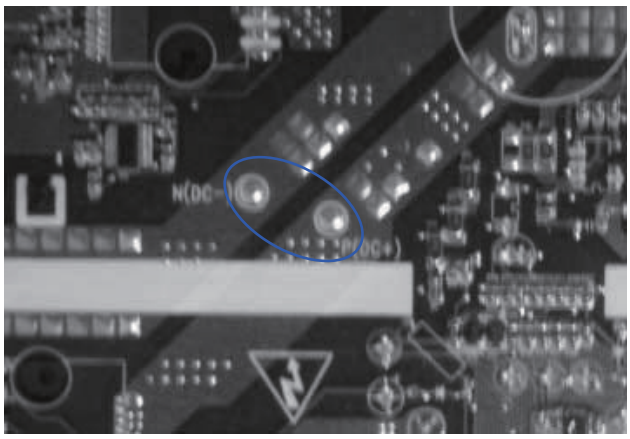

1 IPM protection malfunction:

Main checking point:

- If the input voltage of the unit is within normal range?
- If the connection wire of compressor is connected well? Is it loose? If the connection sequence is correct?
- If the resistance of compressor coil is normal? If the isolation of compressor coil with copper pipe is good?
- If the unit is overloaded? If the heat radiation of the unit is good?
- If the refrigerant charge is suitable?

Flow chart:

- If the resistance of compressor coil is normal? If the isolation of compressor coil with copper pipe is good?
- If the unit is overloaded? If the heat radiation of the unit is good?
- If the refrigerant charge is suitable?

Flow chart:

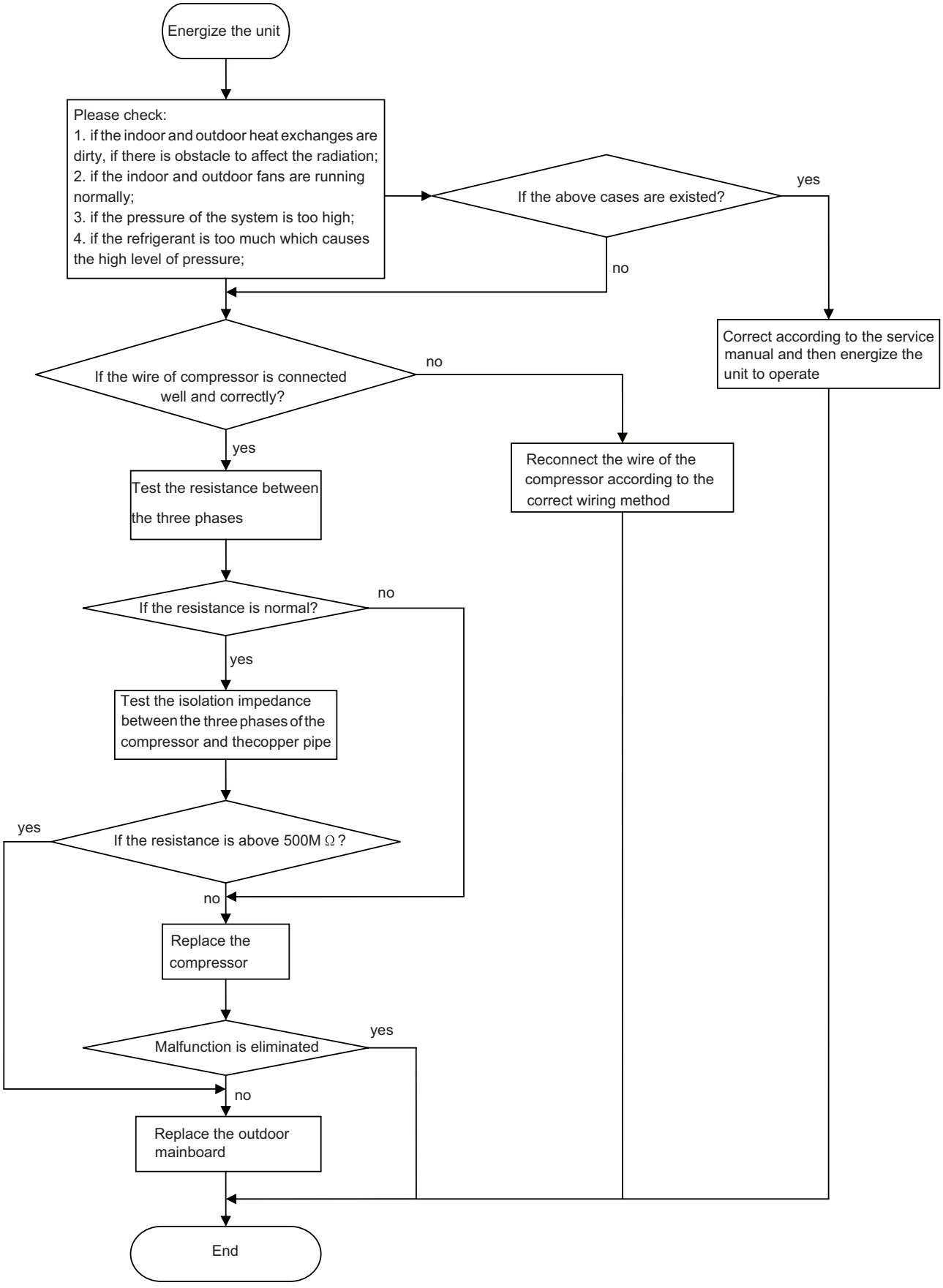

2. PFC protection malfunction, capacity charging malfunction

Main checking points:

- If the wiring of the induction is connected well and if the induction is broken;
- If the mainboard is broken;

Flow chart:

For 18K

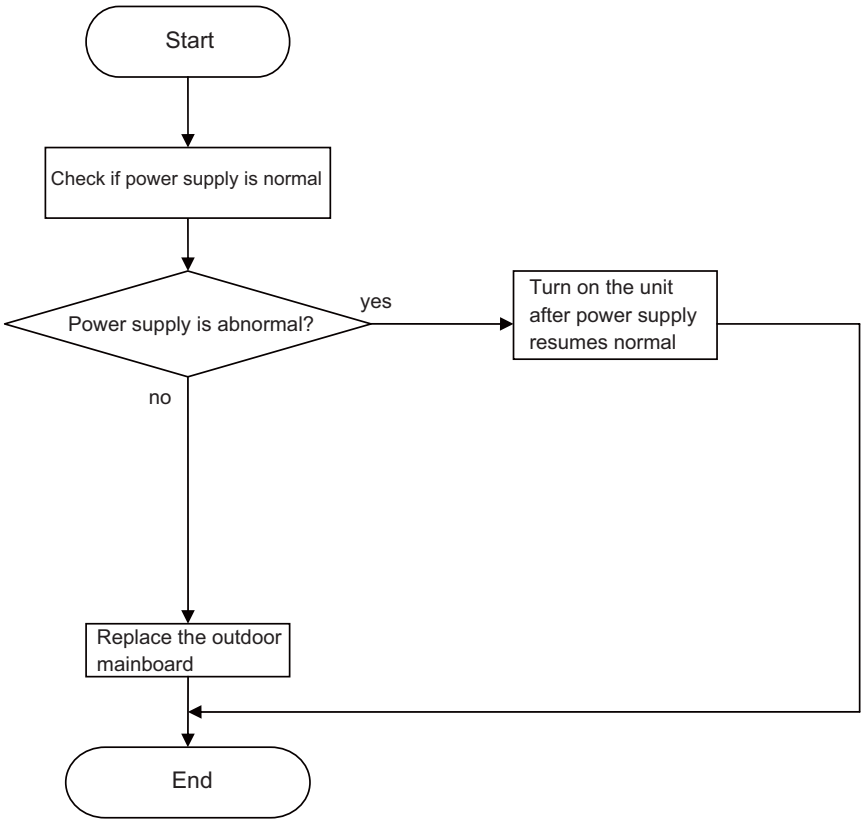

For 24

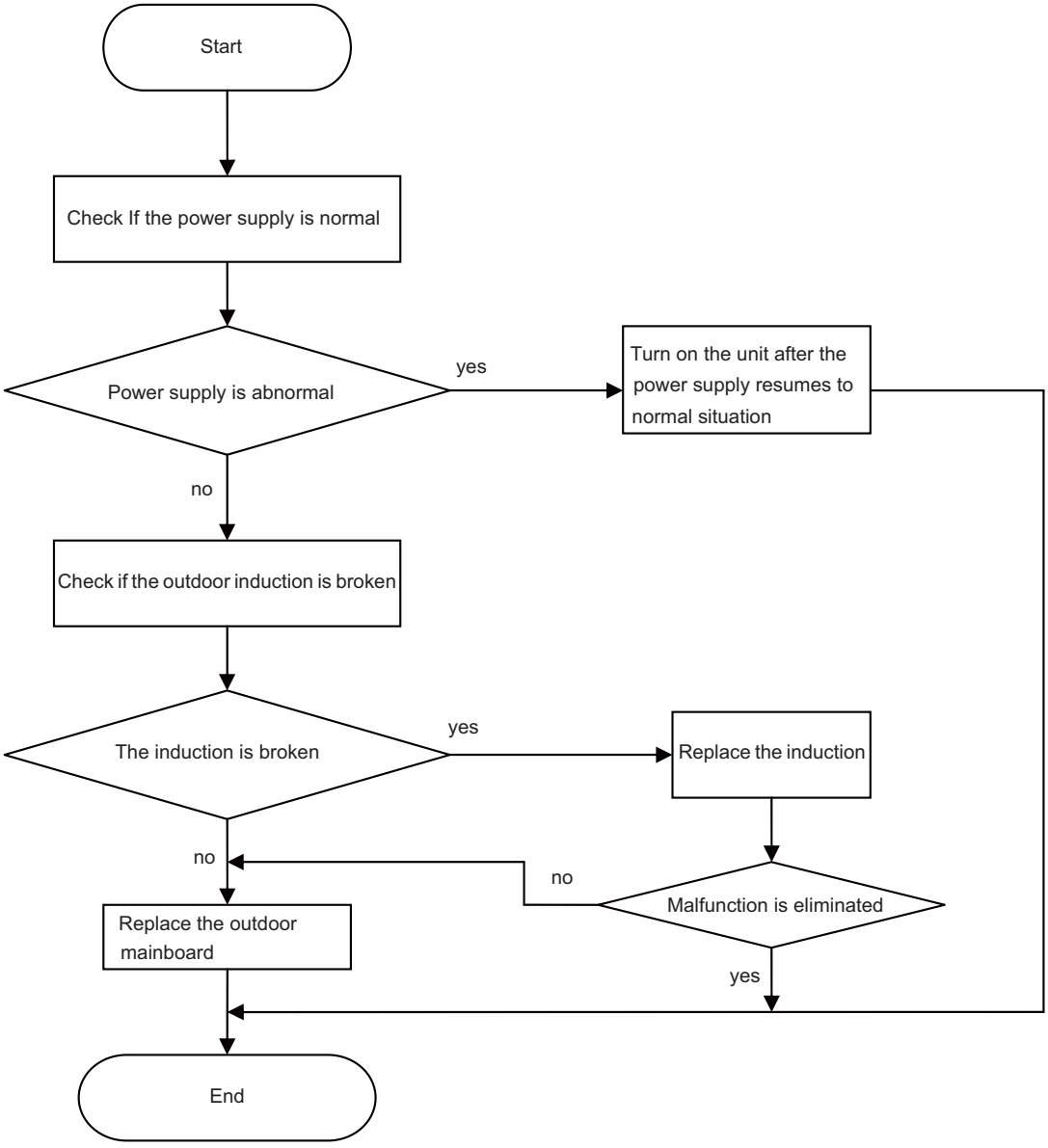
Start
Check If the power supply is normal
Power supply is abnormal
yes
Turn on the unit after the power supply resumes to normal situation
no
Check if the outdoor induction is broken
The induction is broken
yes
Replace the induction
no
no
Malfunction is eliminated
Replace the outdoor mainboard
yes
End

3. Compressor desynchronizing malfunction

Main checking points:

- If the pressure of the system is too high;
- If the eletric expansion valve is working normally or it is broken;
- If the radiation of the unit is good;

Flow chart:

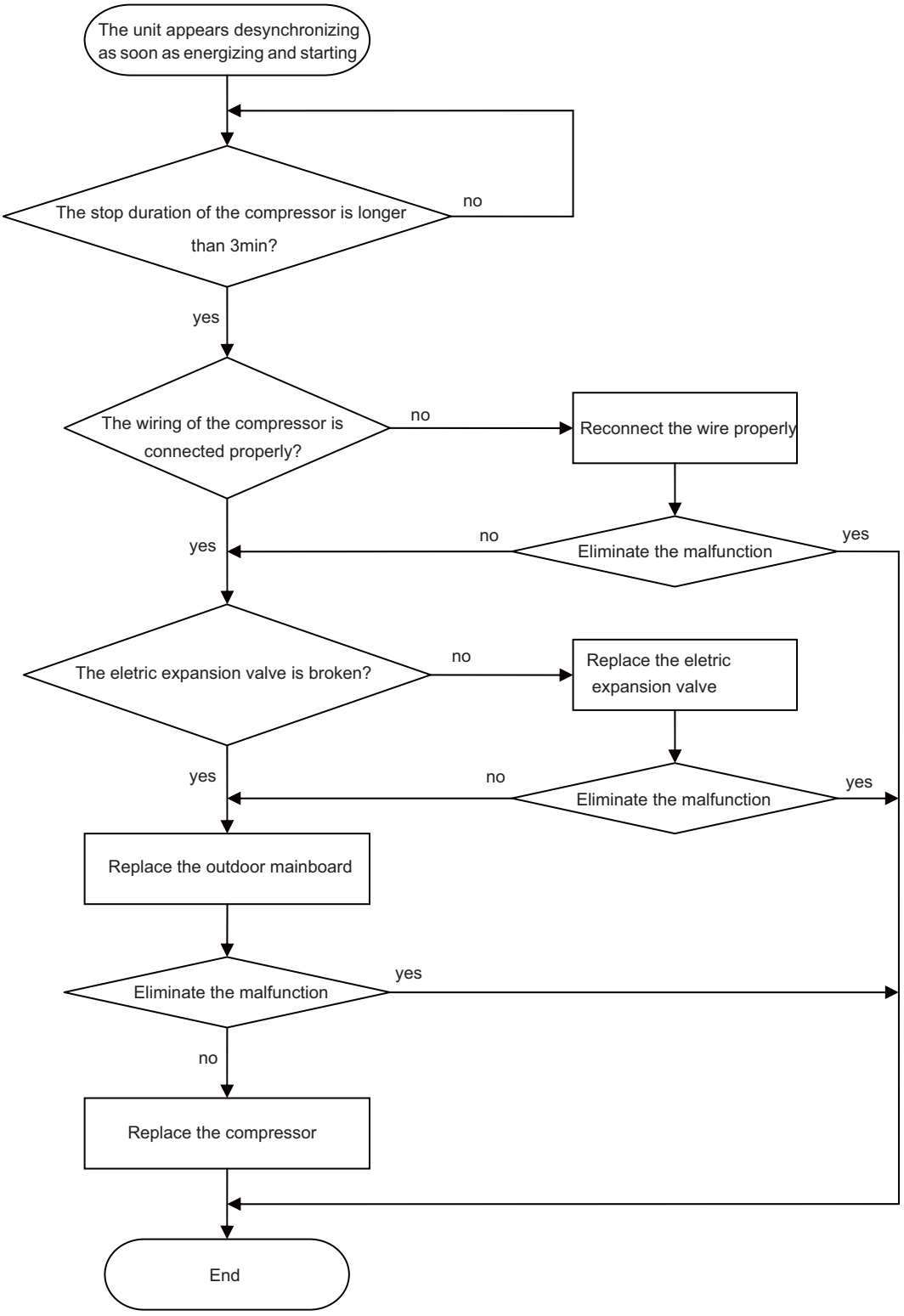

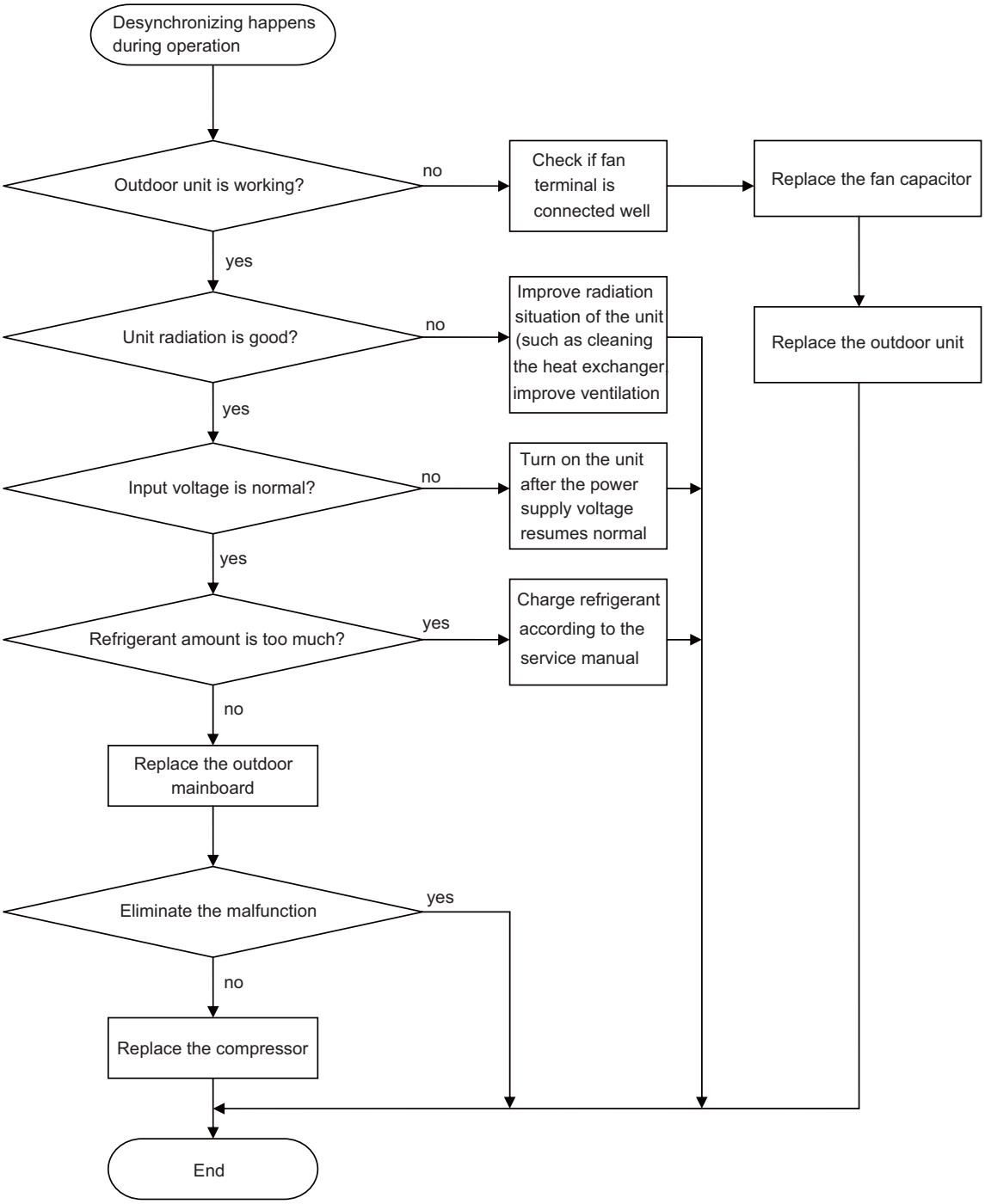
Desynchronizing happens during operation
Outdoor unit is working?
no
Check if fan terminal is connected well
Replace the fan capacitor
yes
Unit radiation is good?
no
Improve radiation situation of the unit (such as cleaning the heat exchanger improve ventilation
Replace the outdoor unit
yes
Input voltage is normal?
no
Turn on the unit after the power supply voltage resumes normal
yes
Refrigerant amount is too much?
yes
Charge refrigerant according to the service manual
no
Replace the outdoor mainboard
Eliminate the malfunction
yes
no
Replace the compressor
End

4. Compressor overload, diacharge protectionmalfunction

Main checking points:

- If the eletric expansion valve is connected well or it is broken;
- If there is refrigerant leakage;
- If the overload protector is broken;

Flow chart:

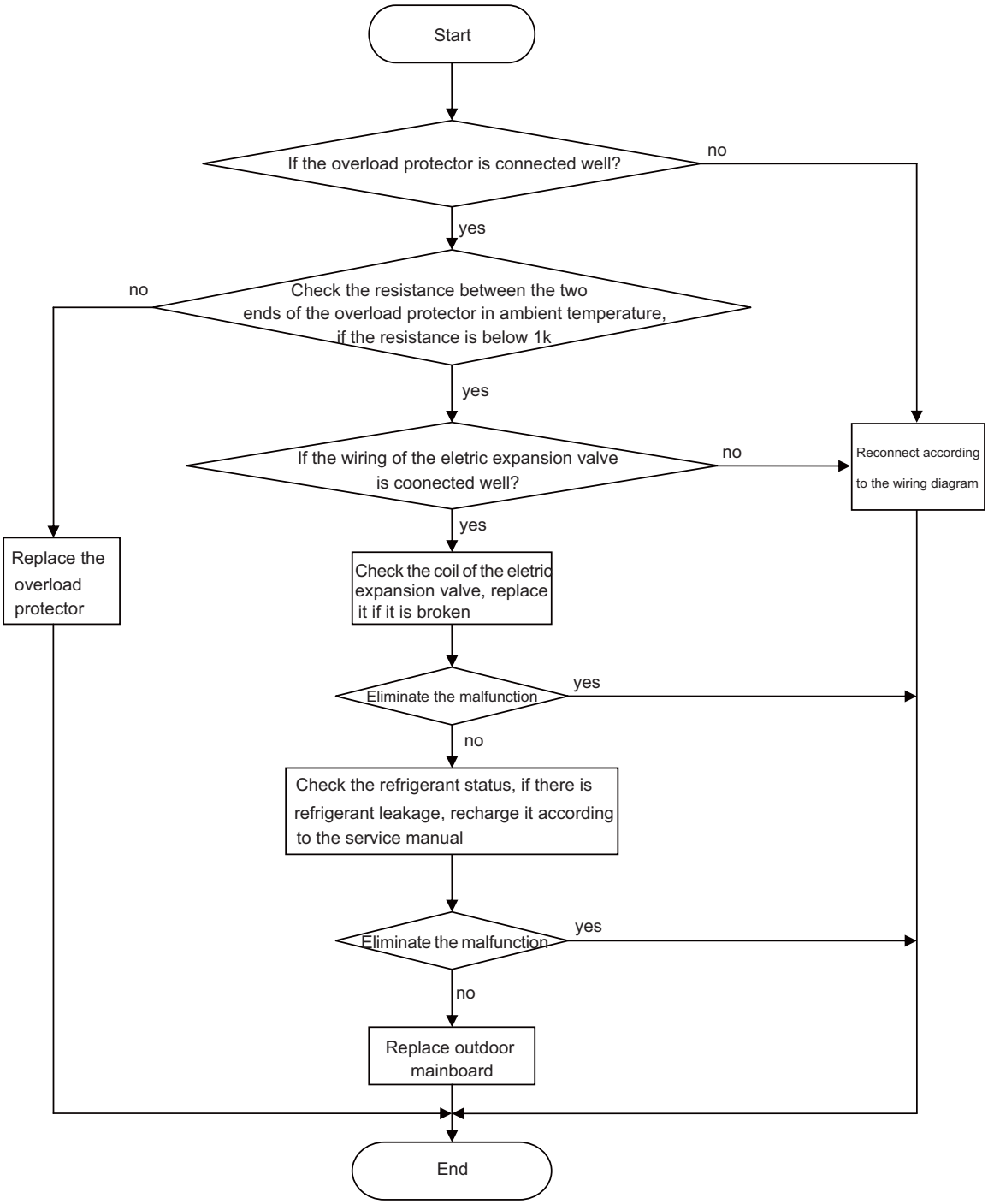

Note: the detection method of the coil of the eletric expansion valve: there is five pieces of coil of the eletric expansion valve, the resistance of one of them (the leftmost or the rightmost one) is almost the same as the resistance of other terminal (within 100 Ω). Judge the condition of the electronic expansion valve through detecting these resistance.

5. Start failuremalfunction

Main checking points:

- If the connection wire of the compressor is connected properly;
- If the stop duration of the compressor is sufficient;
- If the compressor is broken;
- If the refrigerant charging amount is too much;

Flow chart:

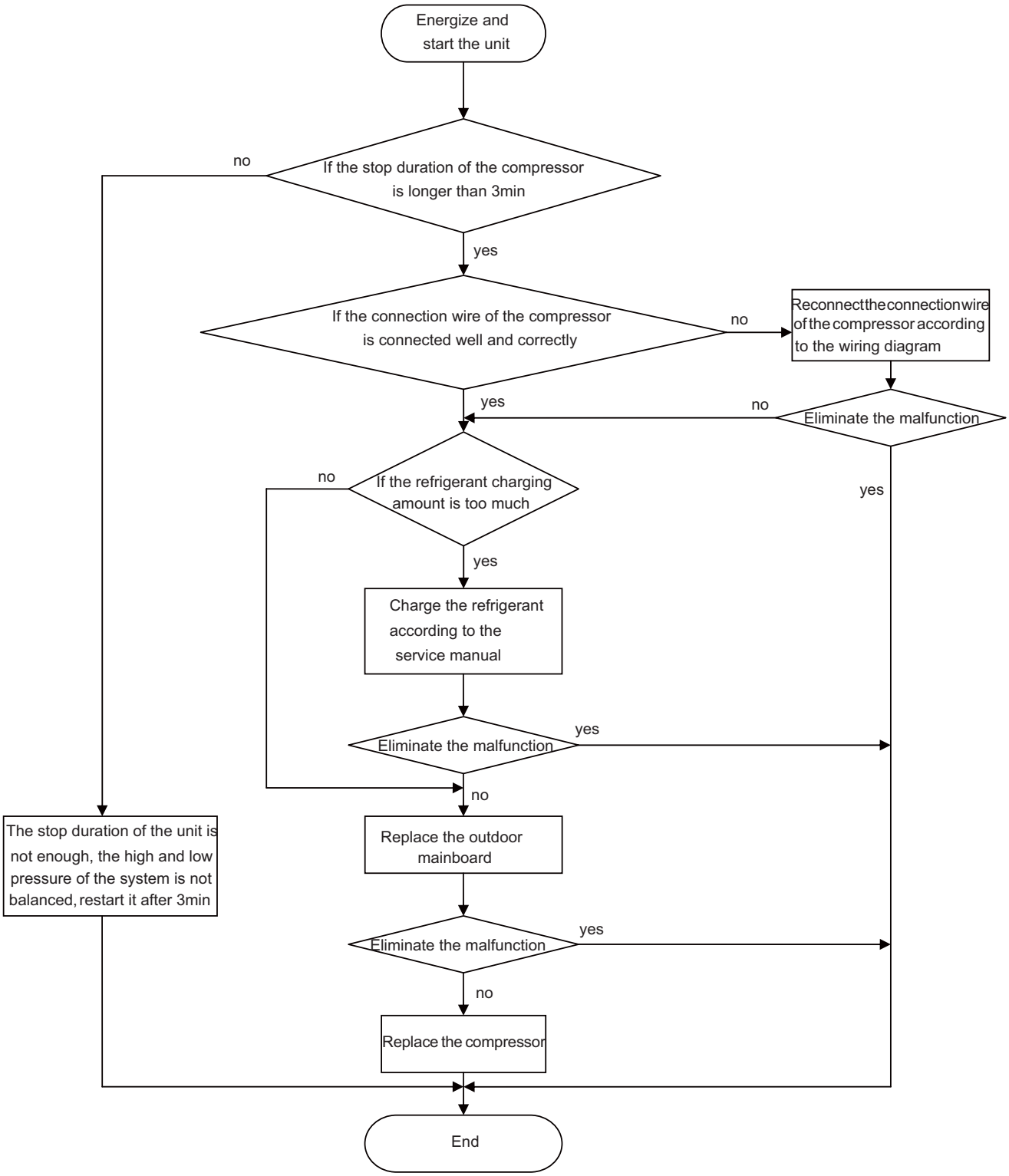

6. Temperature sensor malfunction

Main checking points:

- If the temperature sensor is damaged or broken
- If the terminal of the temperature sensor is loosended or not connected;
- If the mainboard is broken;

Flow chart:

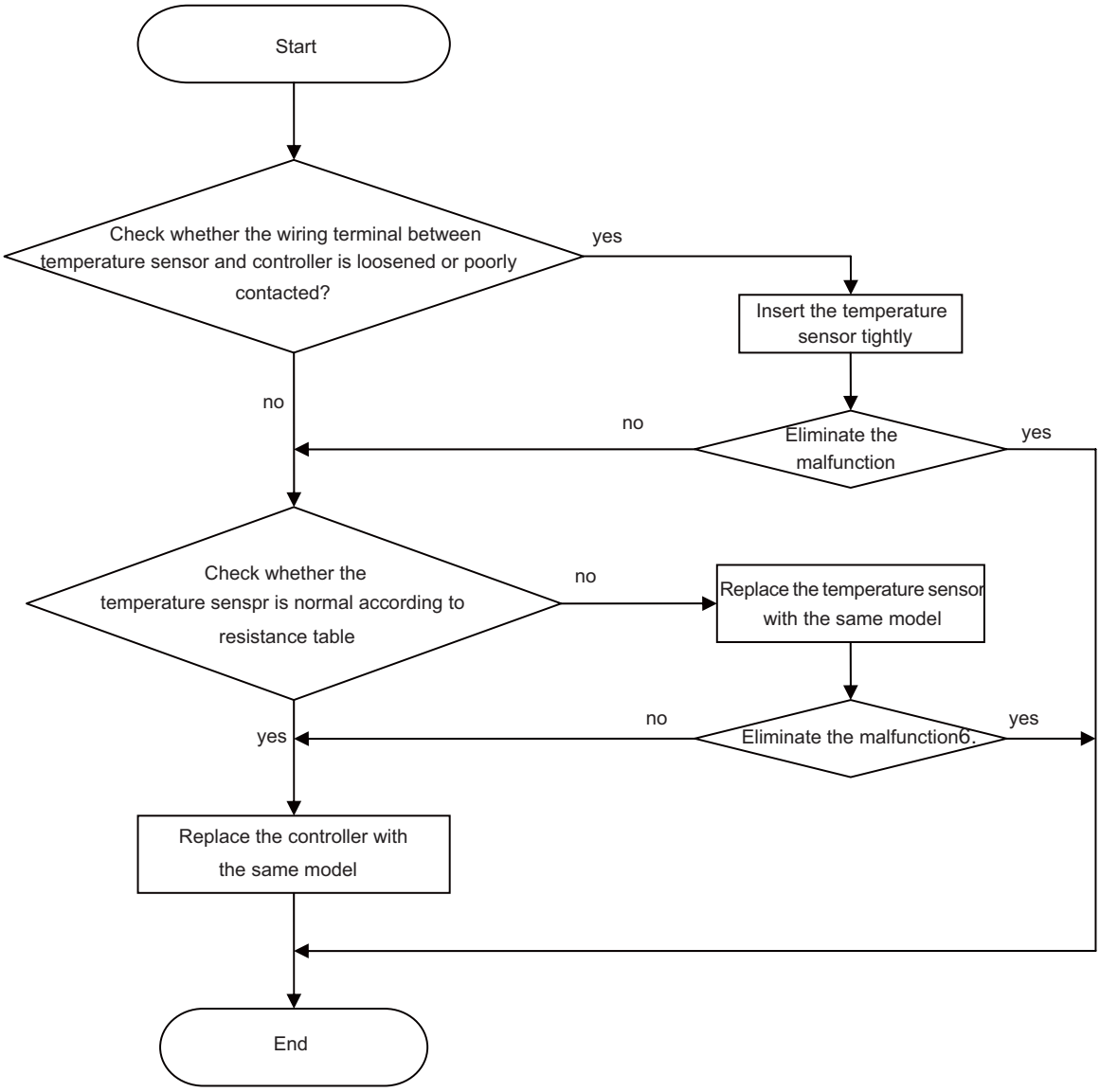

7. DC fan malfunction

Main checking points:

- If the outdoor fan is blocked by foreign objects;
- The connection wire of DC fan is connected reliably? If it is loose?

Flow chart:

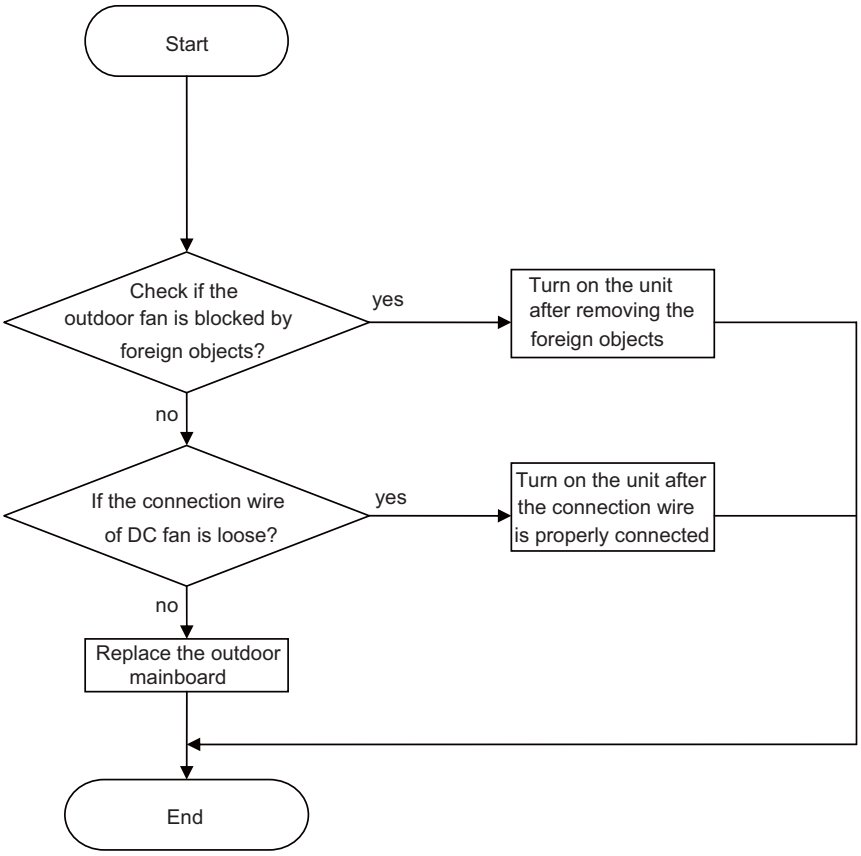

8. Communication malfunction

Main checking points:

- If the connection wire between the indoor unit and outdoor unit is connected well, if the wires inside the unit is connected well;
- If the indoor mainboard or outdoor main board is broken;

Flow chart:

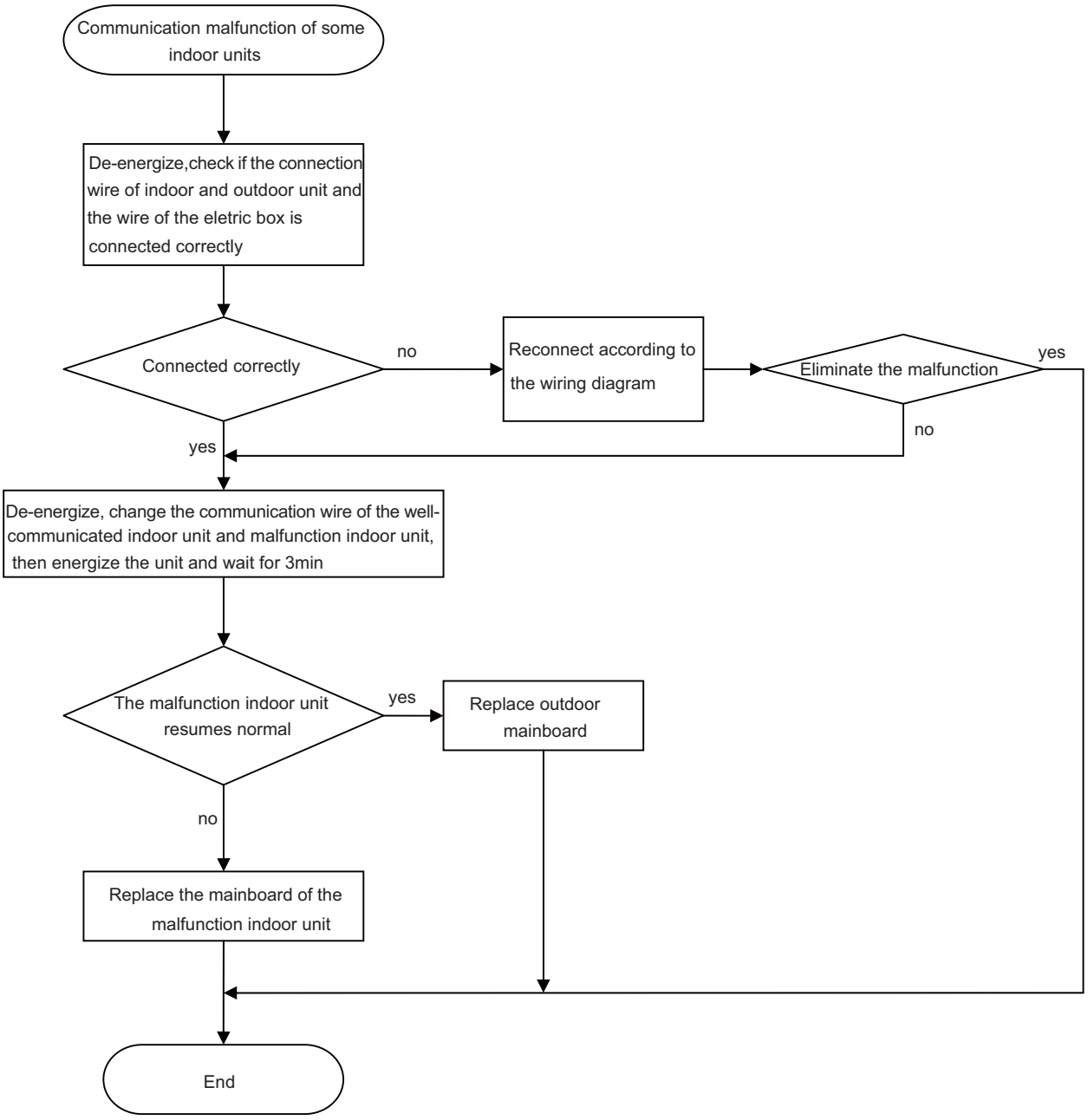

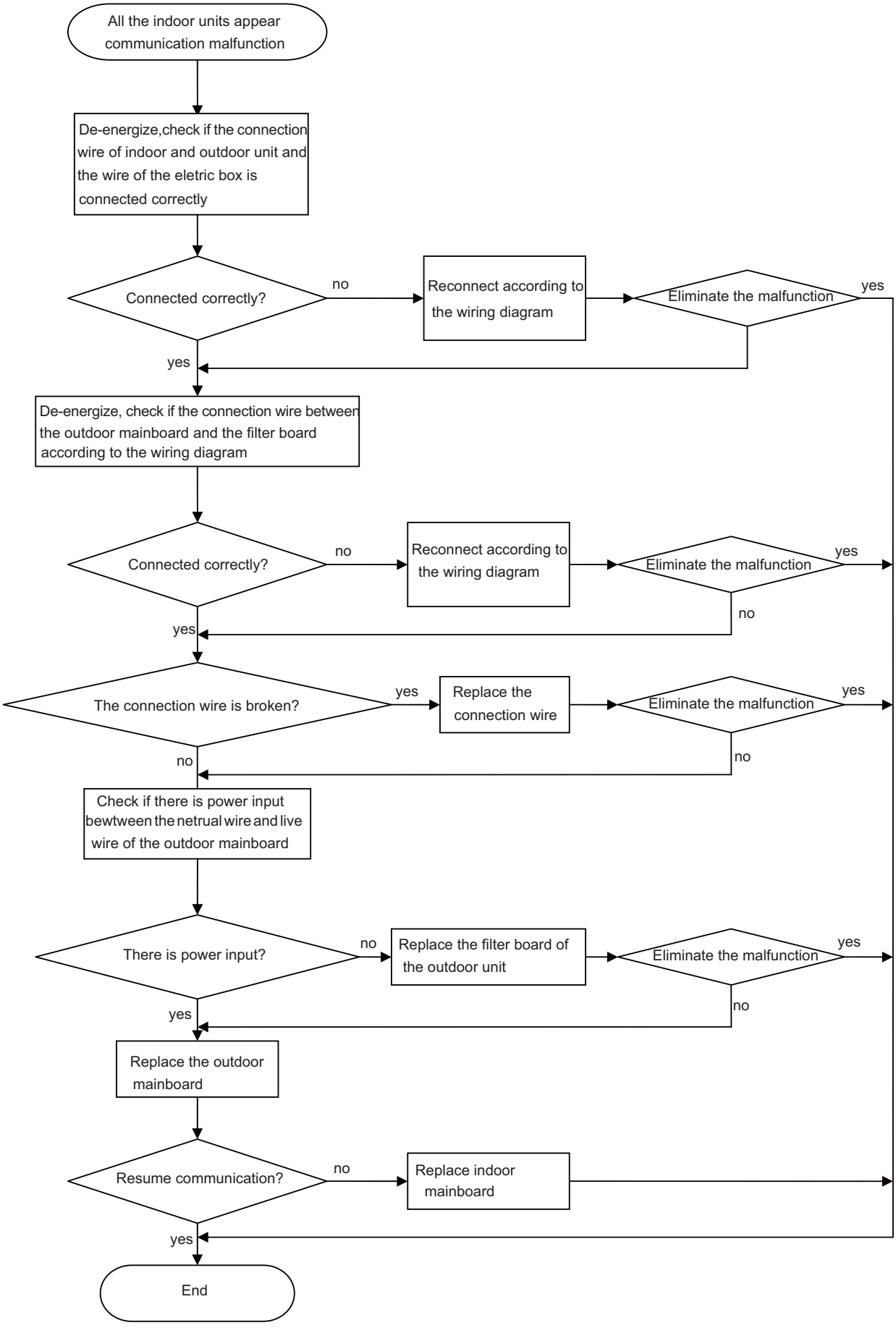
All the indoor units appear communication malfunction
De-energize,check if the connection wire of indoor and outdoor unit and the wire of the eletric box is connected correctly
Connected correctly?
no
Reconnect according to the wiring diagram
Eliminate the malfunction
yes
yes
De-energize, check if the connection wire between the outdoor mainboard and the filter board according to the wiring diagram
Connected correctly?
no
Reconnect according to the wiring diagram
Eliminate the malfunction
yes
no
yes
The connection wire is broken?
yes
Replace the connection wire
Eliminate the malfunction
yes
no
no
Check if there is power input bewtween the netrual wire and live wire of the outdoor mainboard
There is power input?
no
Replace the filter board of the outdoor unit
Eliminate the malfunction
yes
no
yes
Replace the outdoor mainboard
Resume communication?
no
Replace indoor mainboard
yes
End

9. Anti-high temperatureand overload malfunction

Main checking points:

- If the outdoor ambient temperature is within the normal range;
- If the indoor fan and outdoor fan are running normally;
- If the indoor and outdoor radiation environment is good;

Flow chart:

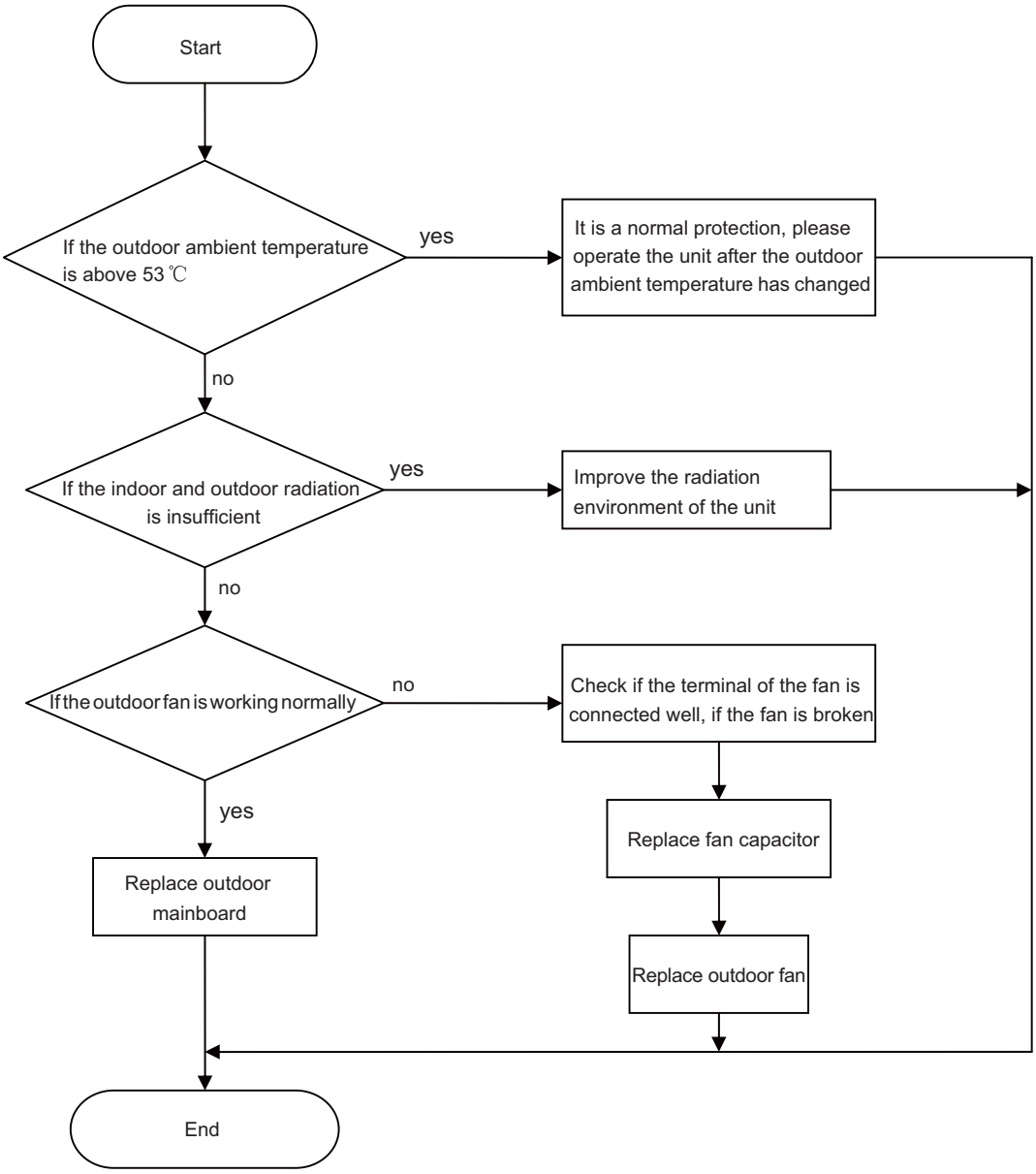

9.3 Maintenance Method for Normal Malfunction

1. Air Conditioner Can't be Started Up

Possible Causes	Discriminating Method (Air conditioner Status)	Troubleshooting
No power supply, or poor connection for power plug	After energization, operation indicator isn't bright and the buzzer can't give out sound	Confirm whether it's due to power failure. If yes, wait for power recovery. If not, check power supply circuit and make sure the power plug is connected well.
Wrong wire connection between indoor unit and outdoor unit, or poor connection for wiring terminals	Under normal power supply circumstances, operation indicator isn't bright after energization	Check the circuit according to circuit diagram and connect wires correctly. Make sure all wiring terminals are connected firmly
Electric leakage for air conditioner	After energization, room circuit breaker trips off at once	Make sure the air conditioner is grounded reliably Make sure wires of air conditioner is connected correctly Check the wiring inside air conditioner. Check whether the insulation layer of power cord is damaged; if yes, place the power cord.
Model selection for air switch is improper	After energization, air switch trips off	Select proper air switch
Malfunction of remote controller	After energization, operation indicator is bright, while no display on remote controller or buttons have no action.	Replace batteries for remote controller Repair or replace remote controller

2. Poor Cooling (Heating) for Air Conditioner

Possible Causes	Discriminating Method (Air conditioner Status)	Troubleshooting
Set temperature is improper	Observe the set temperature on remote controller	Adjust the set temperature
Rotation speed of the IDU fan motor is set too low	Small wind blow	Set the fan speed at high or medium
Filter of indoor unit is blocked	Check the filter to see it's blocked	Clean the filter
Installation position for indoor unit and outdoor unit is improper	Check whether the installation postion is proper according to installation requirement for air conditioner	Adjust the installation position, and install the rainproof and sunproof for outdoor unit
Refrigerant is leaking	Discharged air temperature during cooling is higher than normal discharged wind temperature; Discharged air temperature during heating is lower than normal discharged wind temperature; Unit's pressure is much lower than regulated range	Find out the leakage causes and deal with it. Add refrigerant.
Malfunction of 4-way valve	blow cold wind during heating	Replace the 4-way valve
Malfunction of capillary	Discharged air temperature during cooling is higher than normal discharged wind temperature; Discharged air temperature during heating is lower than normal discharged wind temperature; Unit pressure is much lower than regulated range. If refrigerant isn't leaking, part of capillary is blocked	Replace the capillary
Flow volume of valve is insufficient	The pressure of valves is much lower than that stated in the specification	Open the valve completely
Malfunction of horizontal louver	Horizontal louver can't swing	Refer to point 3 of maintenance method for details
Malfunction of the IDU fan motor	The IDU fan motor can't operate	Refer to troubleshooting for H6 for maintenance method in details
Malfunction of the ODU fan motor	The ODU fan motor can't operate	Refer to point 4 of maintenance method for details
Malfunction of compressor	Compressor can't operate	Refer to point 5 of maintenance method for details

3. Horizontal Louver Can't Swing

Possible Causes	Discriminating Method (Air conditioner Status)	Troubleshooting
Wrong wire connection, or poor connection	Check the wiring status according to circuit diagram	Connect wires according to wiring diagram to make sure all wiring terminals are connected firmly
Stepping motor is damaged	Stepping motor can't operate	Repair or replace stepping motor
Main board is damaged	Others are all normal, while horizontal louver can't operate	Replace the main board with the same model

4. ODU Fan Motor Can't Operate

Possible causes	Discriminating method (air conditioner status)	Troubleshooting
Wrong wire connection, or poor connection	Check the wiring status according to circuit diagram	Connect wires according to wiring diagram to make sure all wiring terminals are connected firmly
Capacity of the ODU fan motor is damaged	Measure the capacity of fan capacitor with an universal meter and find that the capacity is out of the deviation range indicated on the nameplate of fan capacitor.	Replace the capacity of fan
Power voltage is a little low or high	Use universal meter to measure the power supply voltage. The voltage is a little high or low	Suggest to equip with voltage regulator
Motor of outdoor unit is damaged	When unit is on, cooling/heating performance is bad and ODU compressor generates a lot of noise and heat.	Change compressor oil and refrigerant. If no better, replace the compressor with a new one

5. Compressor Can't Operate

Possible causes	Discriminating method (air conditioner status)	Troubleshooting
Wrong wire connection, or poor connection	Check the wiring status according to circuit diagram	Connect wires according to wiring diagram to make sure all wiring terminals are connected firmly
Capacity of compressor is damaged	Measure the capacity of fan capacitor with an universal meter and find that the capacity is out of the deviation range indicated on the nameplate of fan capacitor.	Replace the compressor capacitor
Power voltage is a little low or high	Use universal meter to measure the power supply voltage. The voltage is a little high or low	Suggest to equip with voltage regulator
Coil of compressor is burnt out	Use universal meter to measure the resistance between compressor terminals and it's 0	Repair or replace compressor
Cylinder of compressor is blocked	Compressor can't operate	Repair or replace compressor

6. Air Conditioner is Leaking

Possible causes	Discriminating method (air conditioner status)	Troubleshooting
Drain pipe is blocked	Water leaking from indoor unit	Eliminate the foreign objects inside the drain pipe
Drain pipe is broken	Water leaking from drain pipe	Replace drain pipe
Wrapping is not tight	Water leaking from the pipe connection place of indoor unit	Wrap it again and bundle it tightly

7. Abnormal Sound and Vibration

Possible causes	Discriminating method (air conditioner status)	Troubleshooting
When turn on or turn off the unit, the panel and other parts will expand and there's abnormal sound	There's the sound of "PAPA"	Normal phenomenon. Abnormal sound will disappear after a few minutes.
When turn on or turn off the unit, there's abnormal sound due to flow of refrigerant inside air conditioner	Water-running sound can be heard	Normal phenomenon. Abnormal sound will disappear after a few minutes.
Foreign objects inside the indoor unit or there're parts touching together inside the indoor unit	There's abnormal sound fro indoor unit	Remove foreign objects. Adjust all parts' position of indoor unit, tighten screws and stick damping plaster between connected parts
Foreign objects inside the outdoor unit or there're parts touching together inside the outdoor unit	There's abnormal sound fro outdoor unit	Remove foreign objects. Adjust all parts' position of outdoor unit, tighten screws and stick damping plaster between connected parts
Short circuit inside the magnetic coil	During heating, the way valve has abnormal electromagnetic sound	Replace magnetic coil
Abnormal shake of compressor	Outdoor unit gives out abnormal sound	Adjust the support foot mat of compressor, tighten the bolts
Abnormal sound inside the compressor	Abnormal sound inside the compressor	If add too much refrigerant during maintenance, please reduce refrigerant properly. Replace compressor for other circumstances.

10. Exploded View and Parts List

MULTI18HP230V1CO

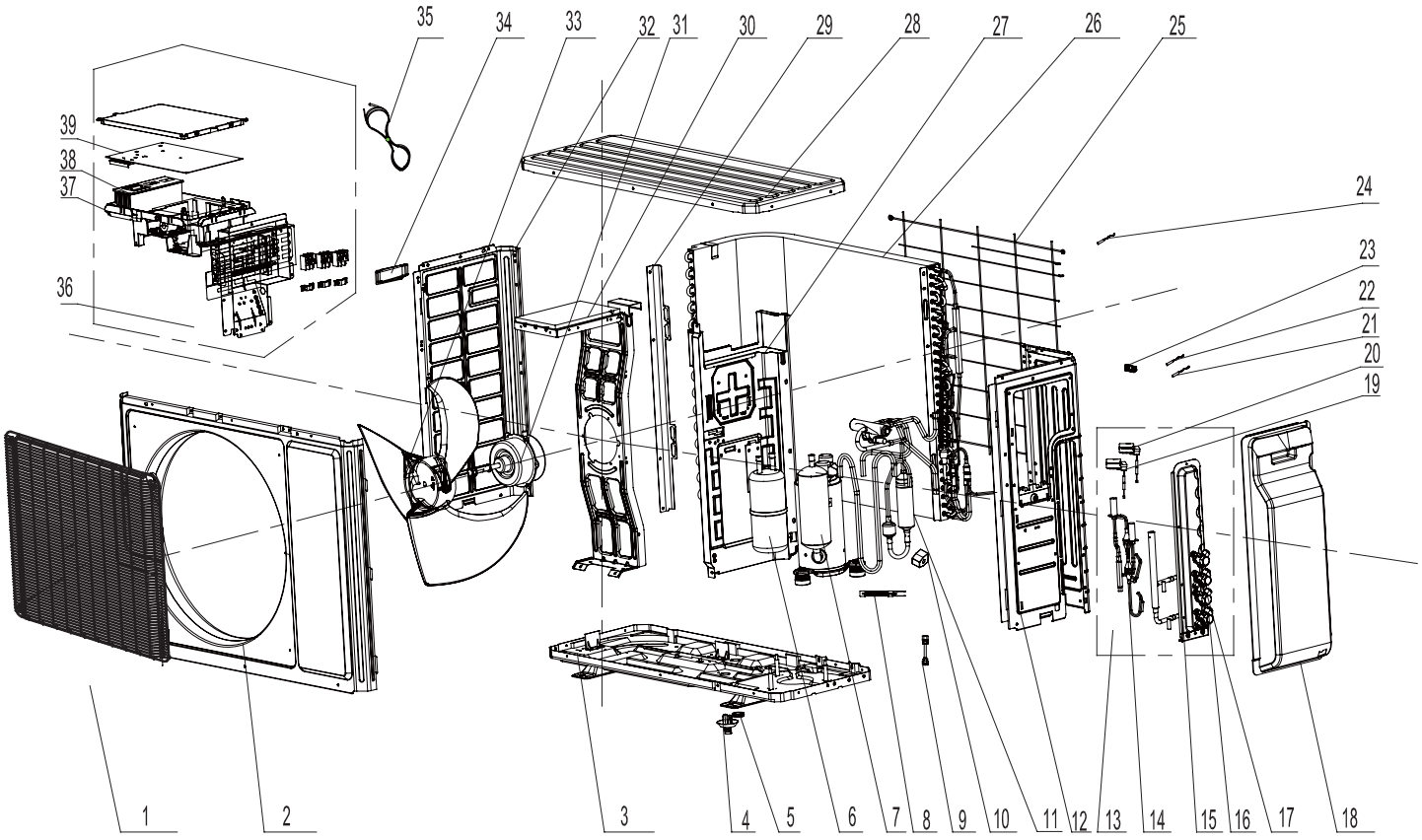

NO.	Description	Part Code	Qty
		MULTI18HP230V1CO	
	Product Code	CB228W04100	
1	Front Grill	01473050	1
2	Front Panel Assy	01433069	1
3	Chassis Sub-assy	02803280P	1
4	Drainage Connecter	/	/
5	Drainage hole Cap	/	/
6	Gas-liquid Separator Assy	07223048	1
7	Compressor and Fittings	0010524501G	1
8	Electric Heater(Compressor)	7651873215	1
9	Tube Connector Sub-assy	06643008	1
10	Magnet Coil	4300040045	1
11	4-Way Valve Assy	03015200001	1
12	Right Side Plate	0131410000901P	1
13	Valve Support Assy	0713395401	1
14	Electronic Expansion Valve assy	0713395301	1
15	Valve Support Sub-Assy	07133845	1
16	Cut off Valve	071302391	1
17	Cut off Valve	07130239	1
18	Valve Cover	/	1
19	Electric Expand Valve Fitting	43000084	1
20	Electric Expand Valve Fitting	4300008401	1
21	Temperature Sensor	39000073	1
22	Temperature Sensor	39000073	1
23	Wiring Clamp	26115004	1
24	Temperature Sensor	39000073	1
25	Rear Grill	01574100003	1
26	Condenser Assy	0116398001	1
27	Clapboard Assy	0123315301	1
28	Coping	01255006P	1
29	Supporting Board(Condenser)	01795010	1
30	Motor Support Sub-Assy	01705025	1
31	Fan Motor	1501403402	1
32	Left Side Plate	01305043P	1
33	Axial Flow Fan	10335014	1
34	Left Handle	26235401	1
35	Connecting Cable	/	/
36	Electric Box Assy	10000100020	1
37	Electric Box	20113015	1
38	Radiator	/	/
39	Main Board	30138000311	1

Above data is subject to change without notice.

MULTI24HP230V1CO

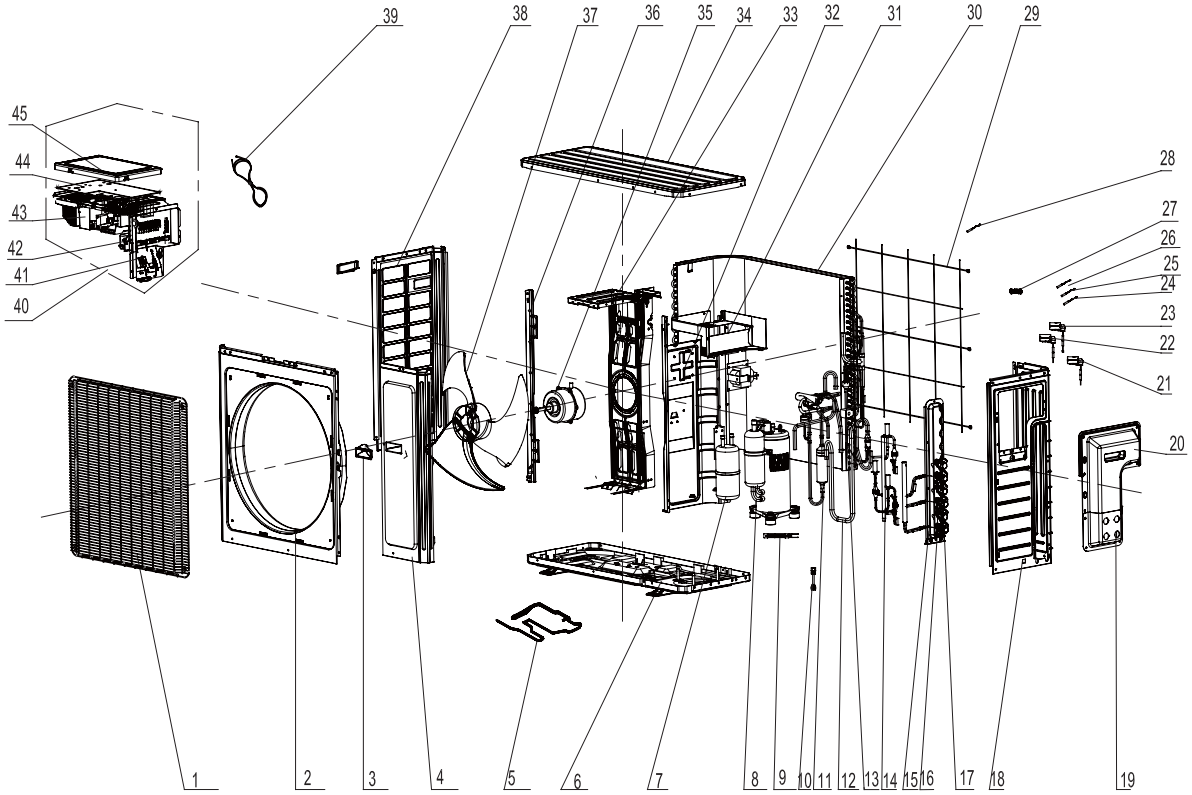

NO.	Description	Part Code	Qty
		MULTI24HP230V1CO	
	Product code	CB228W04200	
1	Front Grill	01473050	1
2	Cabinet	0143500401P	1
3	Left Handle	26235401	1
4	Front Side Plate	01305086P	1
5	Electrical Heater (Chassis)	7651000411	1
6	Chassis Sub-assy	02803280P	1
7	Gas-liquid Separator	07223048	1
8	Compressor and Fittings	0010524501G	3
9	Electric Heater(Compressor)	7651873215	1
10	Tube Connector Sub-assy	03003900001	1
11	4-Way Valve Assy	03015200001	1
12	Connection Pipe	03509700042	1
13	Magnet Coil	4300040045	1
14	Electronic Expansion Valve assy	0713395301	1
15	Valve Support Assy	0713395401	1
16	Cut off Valve	071302391	1
17	Cut off Valve	07130239	1
18	Right Side Plate	0131410000901P	1
19	Wiring Cover Sub-assy	01264100034	1
20	Handle Assy	02204100008	1
21	Electric Expand Valve Fitting	4300008402	1
22	Electric Expand Valve Fitting	4300008401	1
23	Electric Expand Valve Fitting	43000084	1
24	Temperature Sensor	3900030901	1
25	Temperature Sensor	3900007306	1
26	Temperature Sensor	3900007305	1
27	Wiring Clamp	26115004	1
28	Temperature Sensor	39000073	1
29	Rear Grill	01574100003	1
30	Condenser Assy	0116398001	1
31	Electric Box (Fireproofing)	01413426	1
32	Clapboard Sub-Assy	01233190	1
33	Motor Support Sub-Assy	01705025	1
34	Top Cover Sub-Assy	01255007	1
35	Fan Motor	1501403402	1
36	Condenser Support Plate	01175092	1
37	Axial Flow Fan	10335014	1
38	Left Side Plate	01305043P	1
39	Connecting Cable	4002054026	1
40	Electric Box Assy	10000100020	1
41	Terminal Board	42010178	1
42	Connection Support	01703211	1
43	Electric Box	20113015	1
44	Main Board	30138000311	1
45	Electric Box Cover Sub-Assy	02603217	1

Above data is subject to change without notice.

11. Removal Procedure

⚠ Warning: Be sure to wait for a minimum of 20 minutes after turning off all power supplies and discharge the refrigerant completely before removal.

WHD(18)HP230V1CO

Steps	Procedure
1.Remove big handle and wire connection cover	
Before disassembly	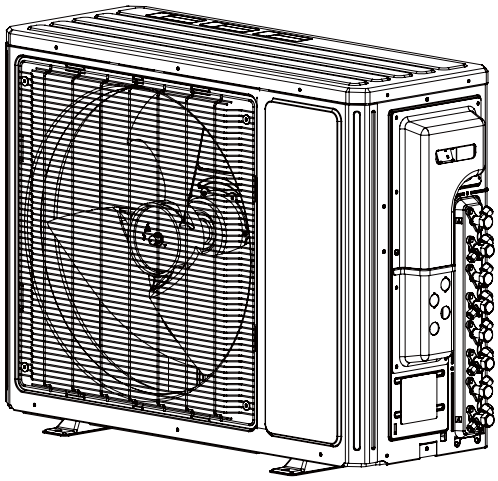
Remove the screws fixing big handle and right side plate to remove the big handle.	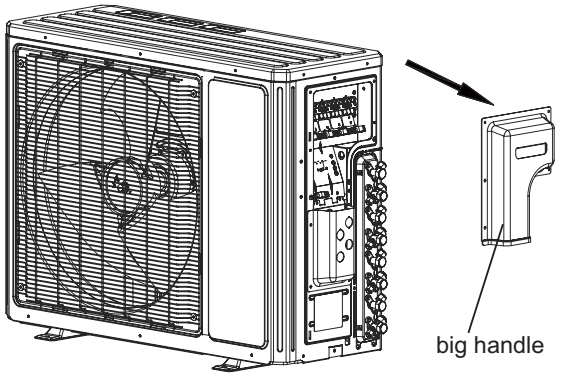
Remove the screws fixing wire connection cover and right side plate to remove the wire connection cover.	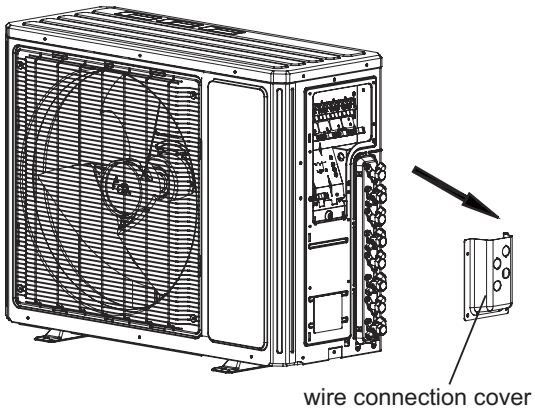

Steps	Procedure
2.Remove top cover	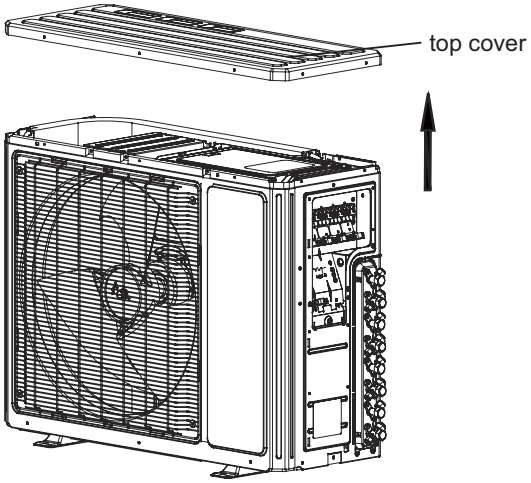
Remove the screws fixing top cover, panel and left & right side plate, to remove top cover.	
3.Remove grille	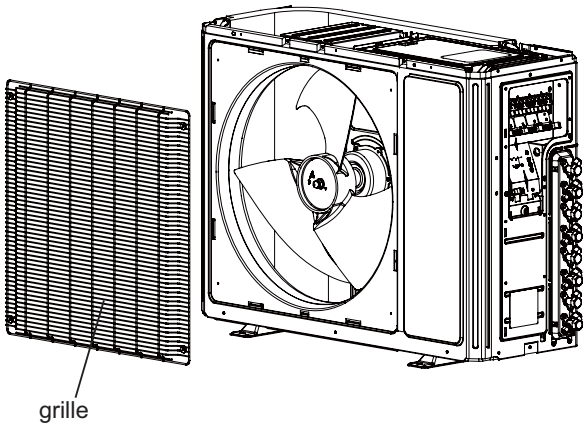
Remove the screws fixing grille and panel, to remove the grille on the panel.	
4.Remove panel	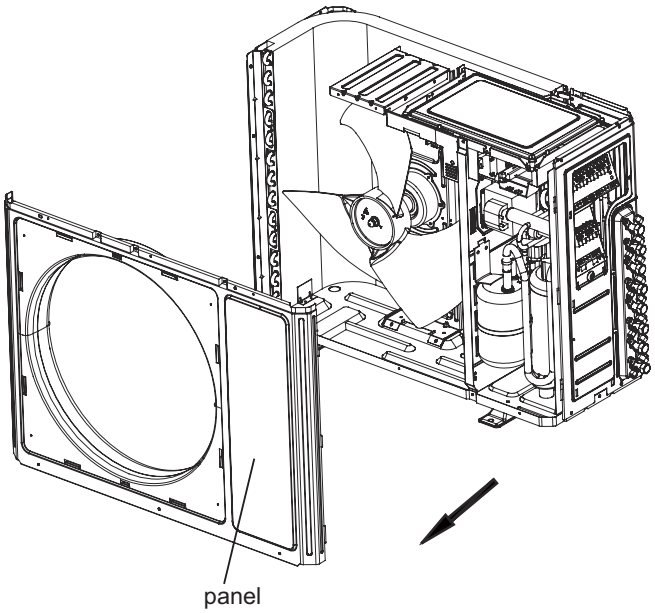
Remove the screws fixing panel, chassis and motor support, to remove the panel.	

Steps	Procedure
5.Remove right side plate	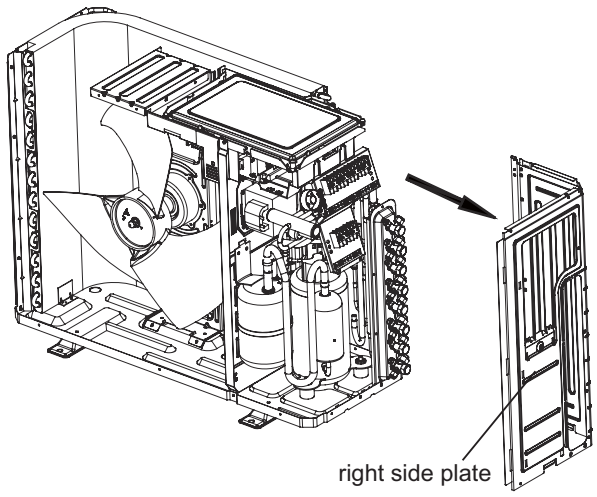
Remove the screws fixing right side plate, valve support and guard grille, to remove the right side plate.	
6.Remove guard grille	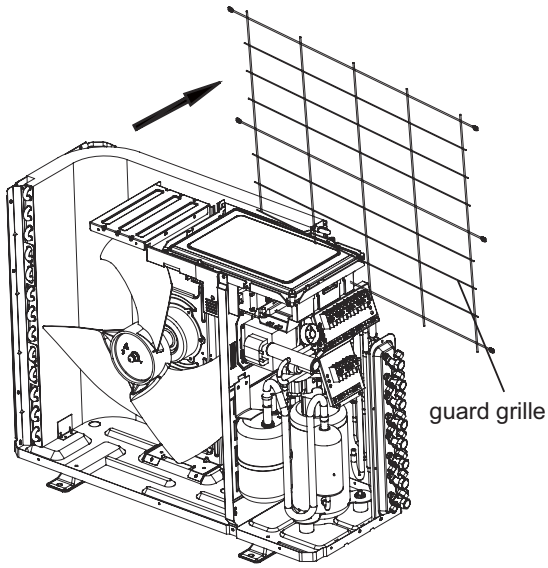
Remove the screws fixing guard grille and left side plate to remove guard grille.	
7.Remove left side plate	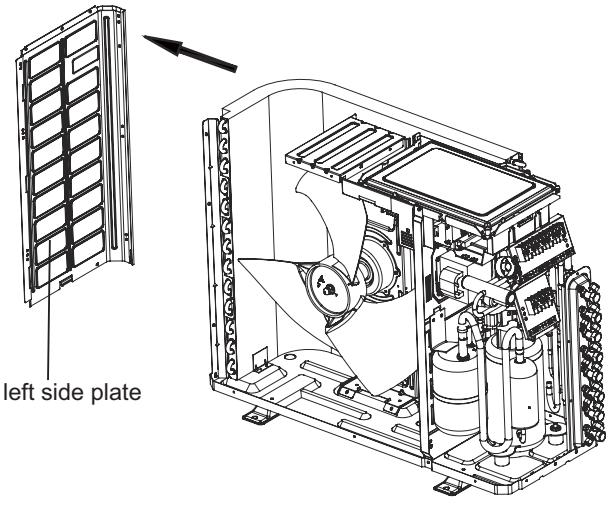
Remove the screws fixing chassis and condenser support, to remove the left side plate.	

Steps	Procedure
8.Remove condenser support	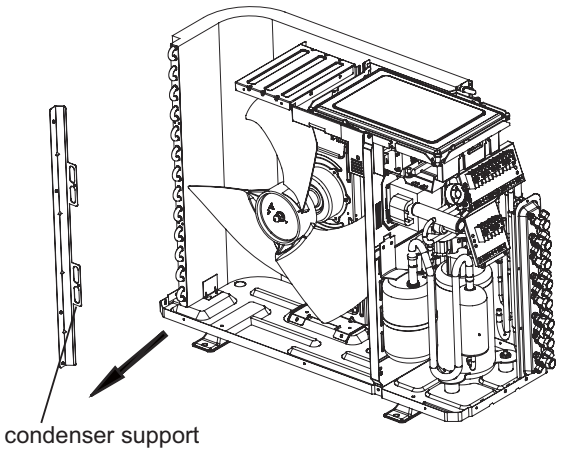
Remove the screws fixing support and chassis, to remove the condenser support.	
9.Remove axial fan blade	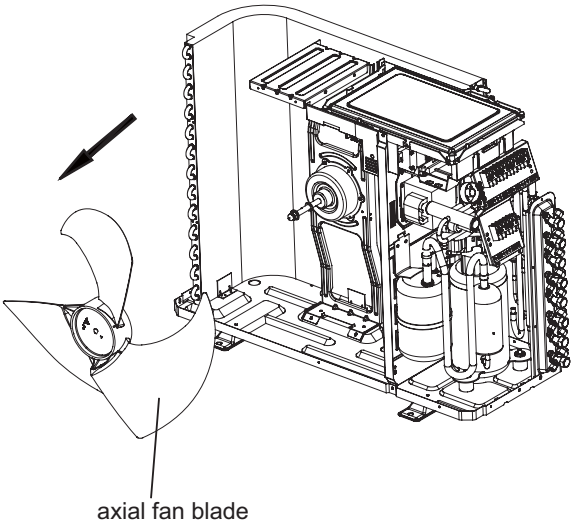
Remove the screw nuts fixing fan blade with spanner, to remove the fan blade.	
10.Remove motor and motor support sub-assy	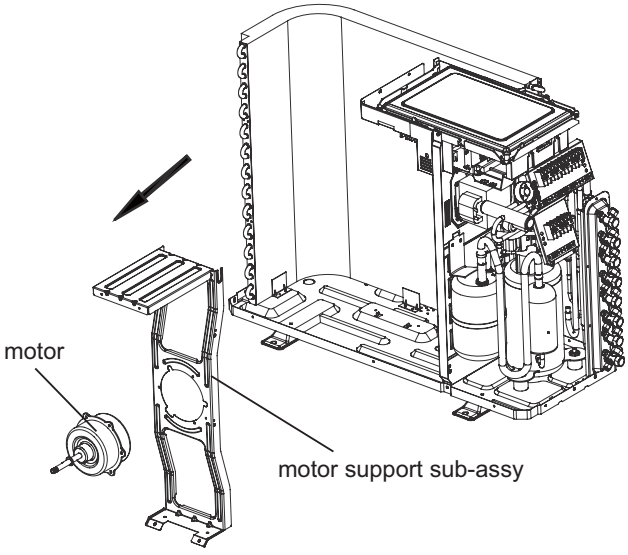
Remove the tapping screws fixing motor, pull out the pin of leading wire for motor and remove the screws fixing motor support and chassis, to remove the motor and motor support sub-assy.	

Steps	Procedure
11.Remove electric box sub-assy	
	Remove the tapping screws fixing isolation sheet, loosen the wire binds, pull out the terminal, lift to remove the electric box sub-assy.
12.Remove PFC electrical inductance	
	Remove the screws fixing PFC electrical inductance and isolation sheet, to remove the PFC electrical inductance.
13.Remove four-way valve sub-assy	
	Welding cut the welding point jointing the four-way valve with blowtorch to remove the four-way valve sub-assy. (Note: please make sure there's no refrigerant in the unit before remove any tube or compressor)

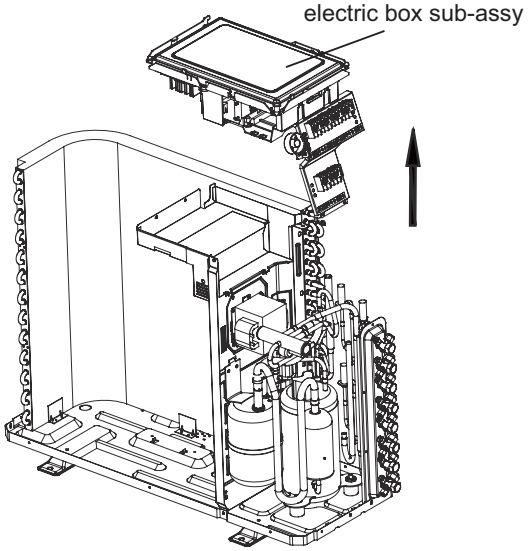

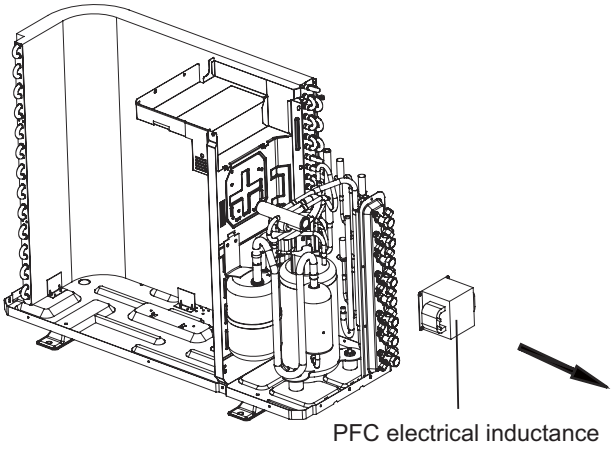

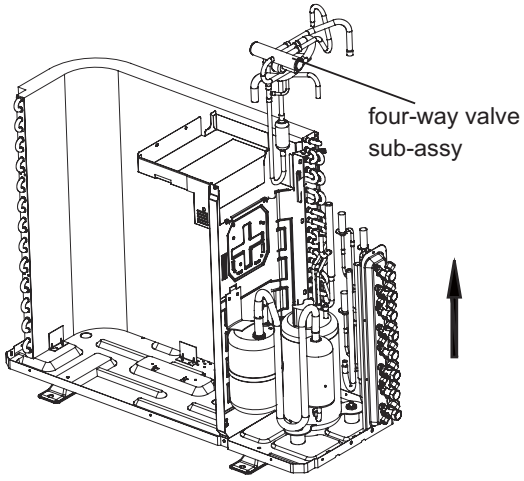

Steps	Procedure
14.Remove suction pipe sub-assy	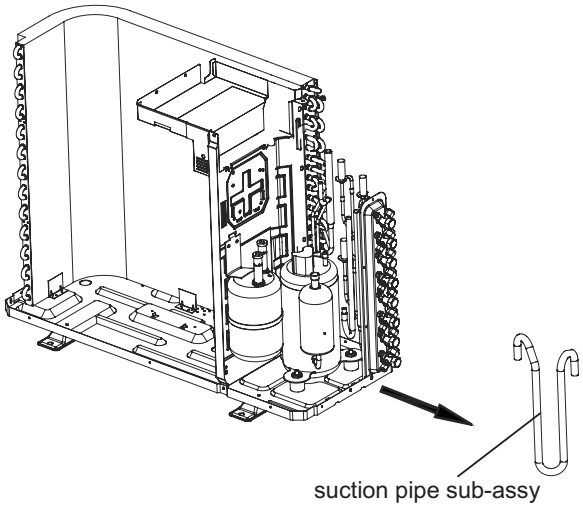
Welding cut the welding point jointing the suction pipe sub-assy, compressor and liquid receiver, to remove the suction pipe sub-assy.	
15.Remove liquid receiver	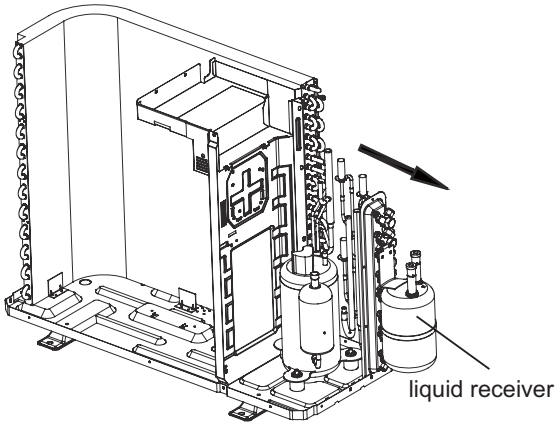
Remove the screws fixing isolation sheet and liquid receiver and lift to remove the liquid receiver.	
16.Remove the isolation sheet assy	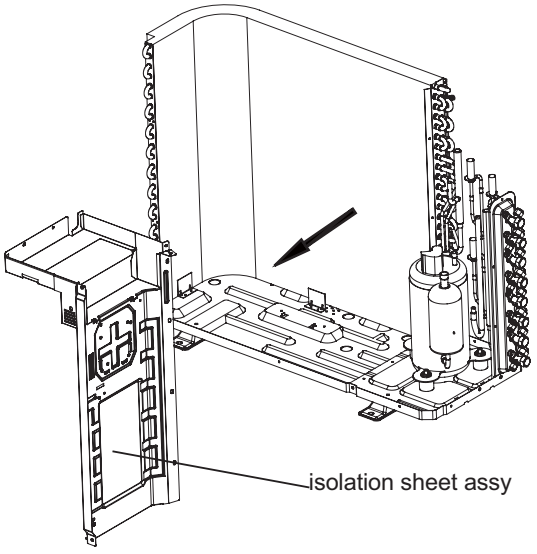
Remove the screws fixing isolation sheet and condenser side plate, to remove the isolation sheet assy.	

Steps	Procedure
17.Remove compressor	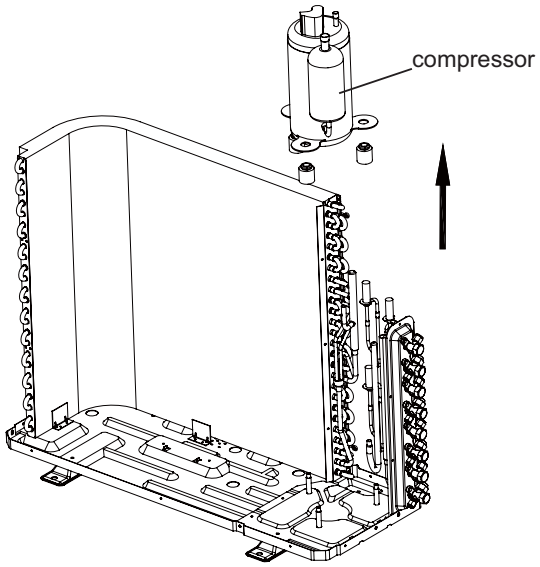
Remove the screw nuts fixing compressor foots and chassis with spanner, as well as the foot cushion, to remove the compressor.	
18.Remove valve support assy	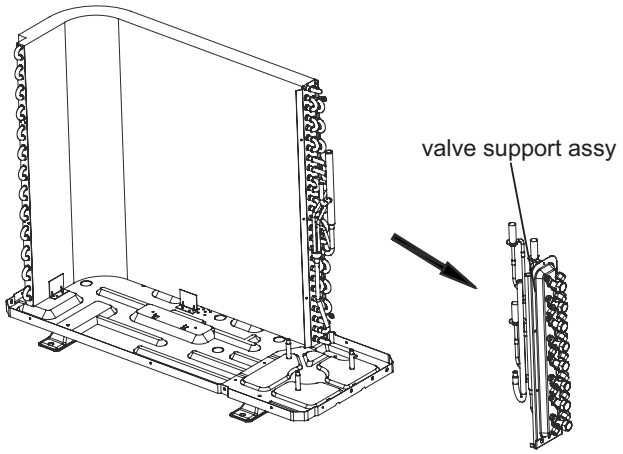
Remove the screws fixing valve support assy and chassis sub-assy, to remove the valve support assy.	
19.Remove EXV assy	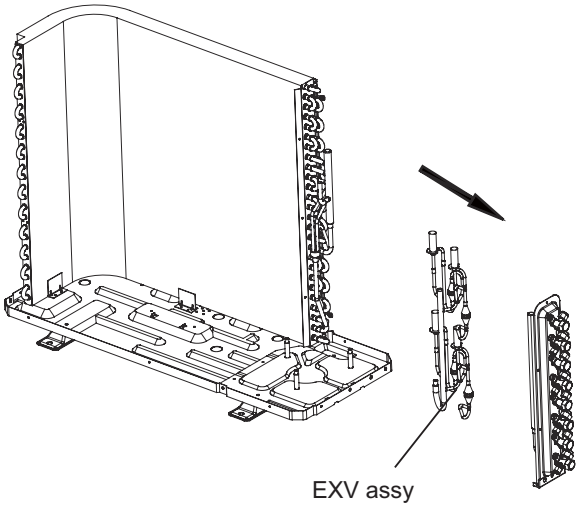
Welding cut the welding point jointing EXV sub-assy and refrigerant collection pipe, to remove the EXV assy. (Note: fully pack the big valve with wet cloth when welding cutting, to avoid high temperature damage of valve)	

MULTI24HP230V1CO

Steps	Procedure
1. Remove valve cover and top panel	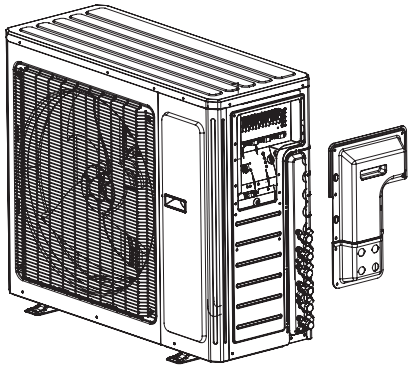
1 Twist off the screws used for fixing and valve cover , pull valve cover up ward to remove it.	
2 Remove the 3 screws connecting the top panel with the front panel and the right side plate, and then remove the top panel.	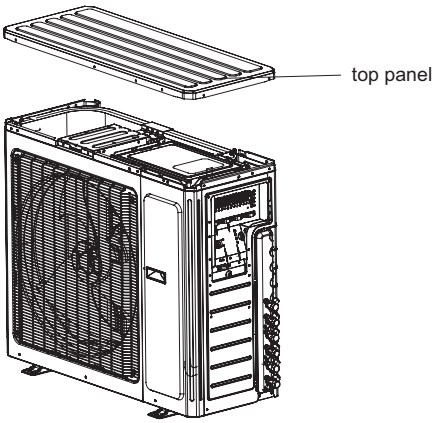
2. Remove grille,front side plate and panel.	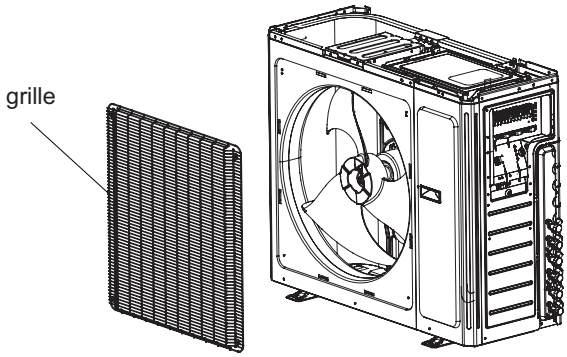
1 Remove the 2 screws connecting the grille and the panel, and then remove the grille.	
2 Remove the 1 screw connecting the front side plate and the panel,and then remove the front side plate.	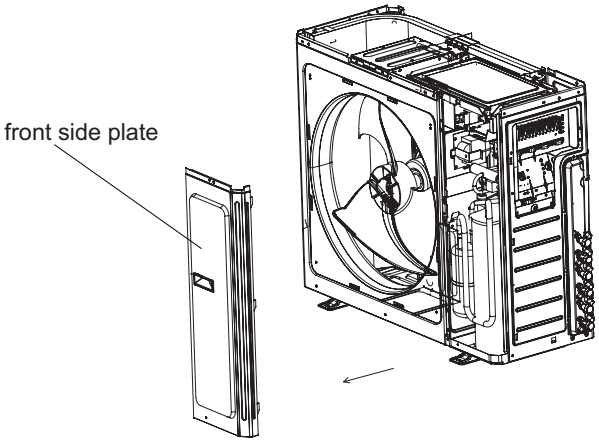

Steps	Procedure	
3	Remove the 5 screws connecting the panel with the chassis and the motor support, and then remove the panel.	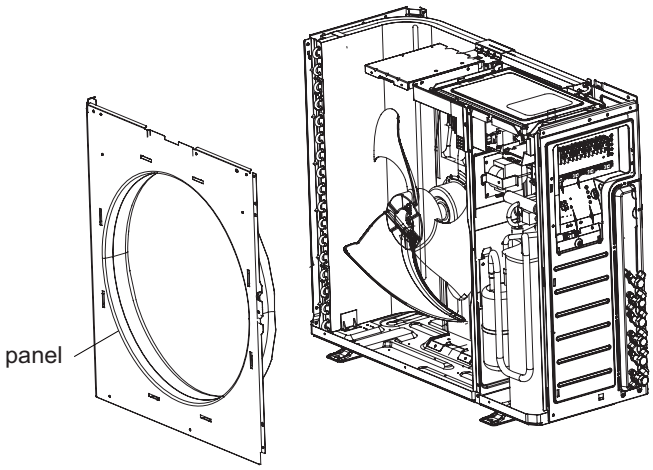
3. Remove right side plate and left side plate		
1	Remove the screws connecting the right side plate with the chassis, the valve support and the electric box, and then remove the right side plate assy.	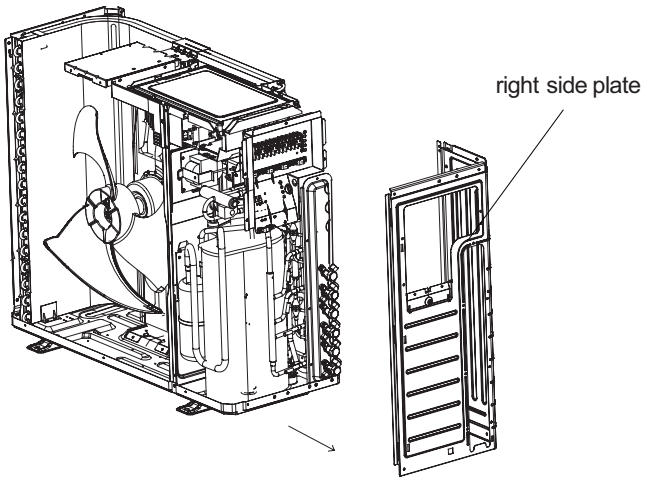
2	Remove the screws connecting the left side plate and the chassis, and then remove the left side plate assy.	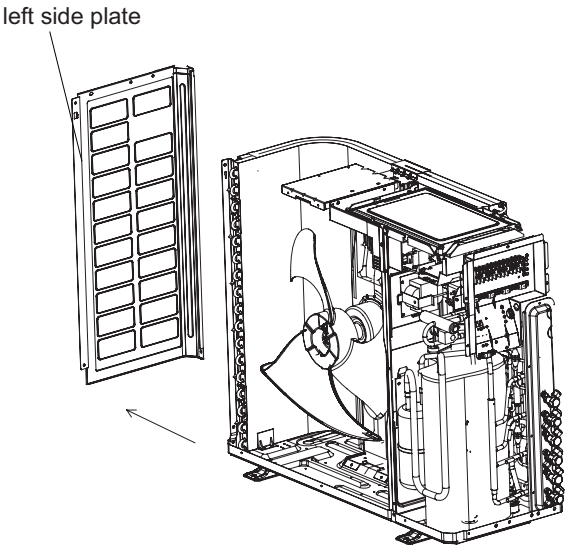

Steps	Procedure	
4. Remove fan motor and axial flow blade		
1	Remove the nuts fixing the blade and then remove the axial flow blade.	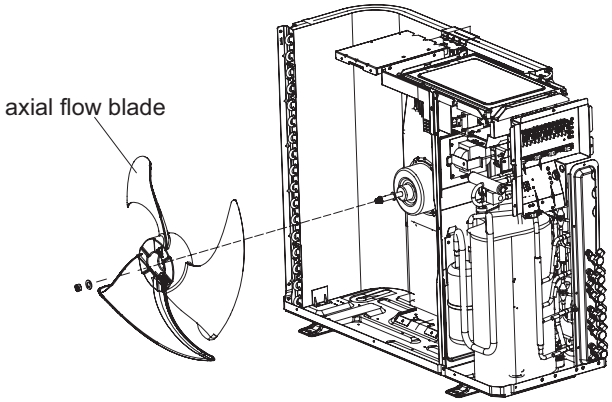
2	Remove the 4 tapping screws fixing the motor; disconnect the leading wire insert of the motor and then remove the motor. Remove the 2 tapping screws fixing the motor support and then pull the motor support upwards to remove it.	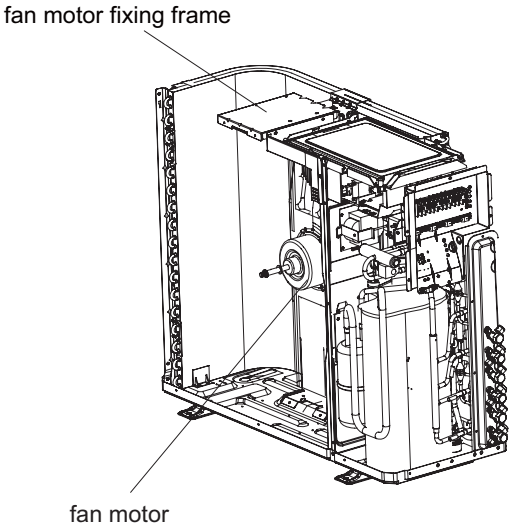
5. Remove electric box		
	Remove the screws fixing the electric box sub-assy; loosen the wire bundle; pull out the wiring terminals and then pull the electric box upwards to remove it.	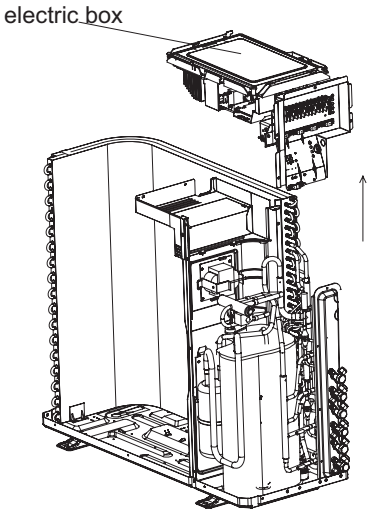

Steps	Procedure
6.Remove soundproof sponge and 4-way valve assy	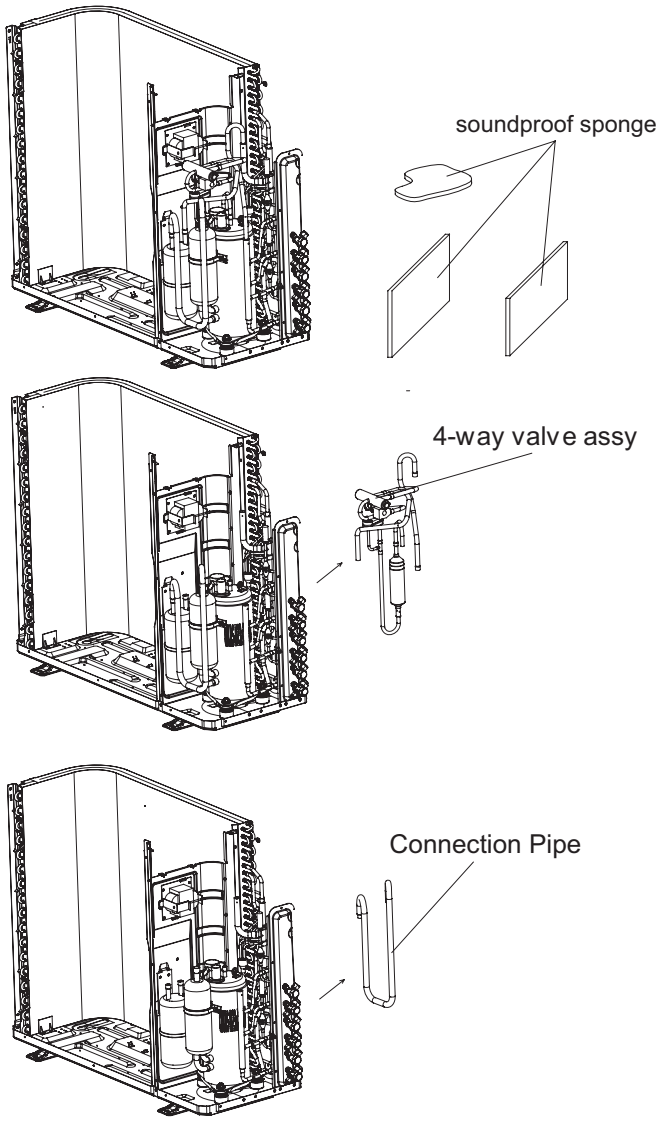
1	Since the piping ports on the soundproof sponge are torn easily, remove the soundproof sponge carefully
2	Discharge the refrigerant completely;unsolder the pipelines connecting the compressor and the condenser assy,and then remove the 4-way valve assy.
7. Remove Isolation sheet	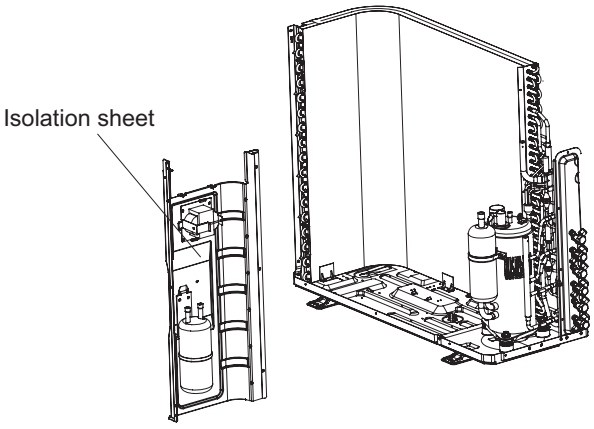
	Remove the 3 screws fixing the isolation sheet and then remove the Isolation sheet.

Steps	Procedure	
8. Remove Cut off Valve and Valve Support		
	Remove the 2 bolts fixing the valve subassemblies. Unsolder the welding joint connecting the gas valve and the return air pipe. Remove the gas valve. (Note: When unsoldering the soldering joint, wrap the gas valve with wet cloth completely to avoid damage to the valve caused by high temperature.) Unsolder the welding joint connecting the liquid valve and the connecting pipe.Remove the liquid valve. Remove screws fixing valve support and then remove the valve support; remove the screw fixing the condenser and then pull the condenser upwards to remove it.	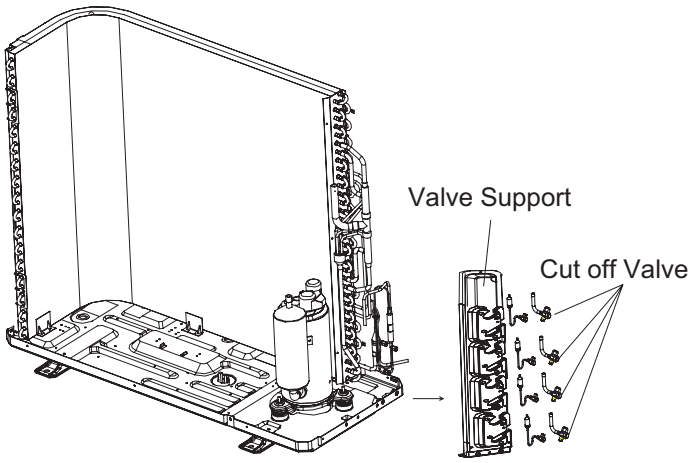
9. Remove compressor		
	Remove the 3 foot nuts fixing the compressor and then remove the compressor.	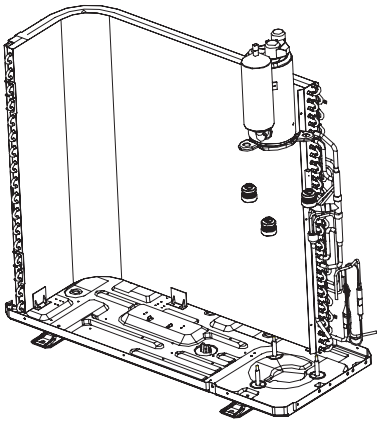
10.Remove support		
1	Remove the screws connecting the support and condenser assy,and thenremove the support.	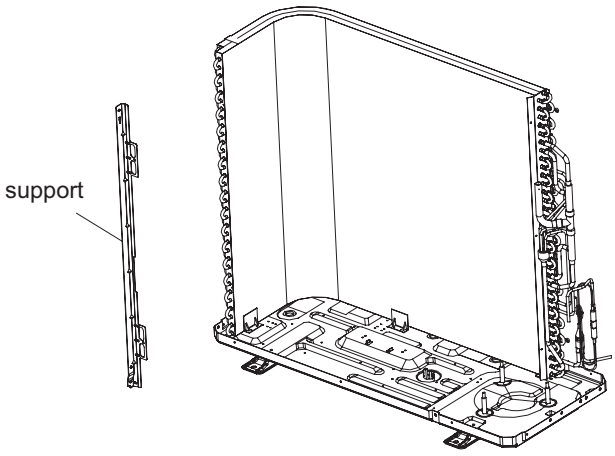

Steps	
11.Remove condenser sub-assy	
	Remove the chassis sub-assy and condenser sub-assy.

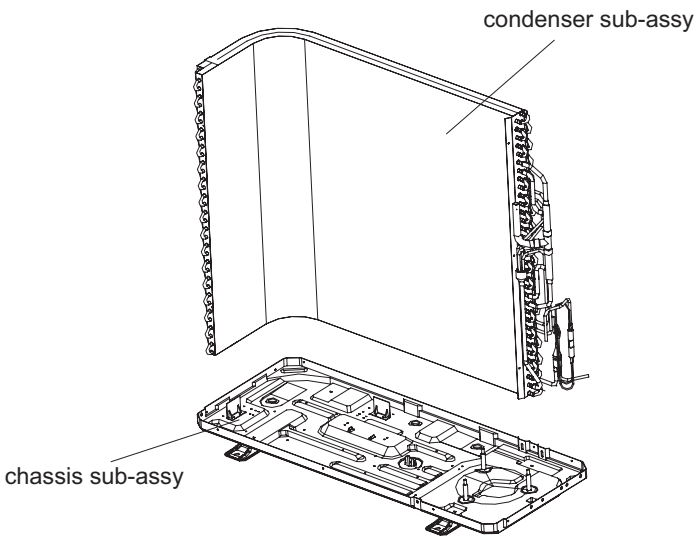

Appendix:

Appendix 1: Reference Sheet of Celsius and Fahrenheit

Conversion formula for Fahrenheit degree and Celsius degree: Tf=Tcx1.8+32

Set temperature

Fahrenheit display temperature (℉)	Fahrenheit (℉)	Celsius (℃)		Fahrenheit display temperature (℉)	Fahrenheit (℉)	Celsius (℃)		Fahrenheit display temperature (℉)	Fahrenheit (℉)	Celsius (℃)
61	60.8	16		69/70	69.8	21		78/79	78.8	26
62/63	62.6	17		71/72	71.6	22		80/81	80.6	27
64/65	64.4	18		73/74	73.4	23		82/83	82.4	28
66/67	66.2	19		75/76	75.2	24		84/85	84.2	29
68	68	20		77	77	25		86	86	30

Ambient temperature

Fahrenheit display temperature (℉)	Fahrenheit (℉)	Celsius (℃)		Fahrenheit display temperature (℉)	Fahrenheit (℉)	Celsius (℃)		Fahrenheit display temperature (℉)	Fahrenheit (℉)	Celsius (℃)
32/33	32	0		55/56	55.4	13		79/80	78.8	26
34/35	33.8	1		57/58	57.2	14		81	80.6	27
36	35.6	2		59/60	59	15		82/83	82.4	28
37/38	37.4	3		61/62	60.8	16		84/85	84.2	29
39/40	39.2	4		63	62.6	17		86/87	86	30
41/42	41	5		64/65	64.4	18		88/89	87.8	31
43/44	42.8	6		66/67	66.2	19		90	89.6	32
45	44.6	7		68/69	68	20		91/92	91.4	33
46/47	46.4	8		70/71	69.8	21		93/94	93.2	34
48/49	48.2	9		72	71.6	22		95/96	95	35
50/51	50	10		73/74	73.4	23		97/98	96.8	36
52/53	51.8	11		75/76	75.2	24		99	98.6	37
54	53.6	12		77/78	77	25				

Appendix 2: Configuration of Connection Pipe

1.Standard length of connection pipe

● 16.4ft,24.6ft, 26.2ft.

2.Min. length of connection pipe is 9.84ft.

3.Max. length of connection pipe and max. high difference.

4.The additional refrigerant oil and refrigerant charging required after prolonging connection pipe

● After the length of connection pipe is prolonged for 32.8ft at the basis of standard length, you should add 5ml of refrigerant oil for each additional 16.4ft of connection pipe.

● The calculation method of additional refrigerant charging amount (on the basis of liquid pipe):

Cooling capacity	Max length of connection pipe	Max height difference
5000 Btu/h(1465 W)	49.2 ft	16.4 ft
7000 Btu/h(2051 W)	49.2 ft	16.4 ft
9000 Btu/h(2637 W)	49.2 ft	32.8 ft
12000 Btu/h(3516 W)	65.6 ft	32.8 ft
18000 Btu/h(5274 W)	82.0 ft	32.8 ft
24000 Btu/h(7032 W)	82.0 ft	32.8 ft
28000 Btu/h(8204 W)	98.4 ft	32.8 ft
36000 Btu/h(10548 W)	98.4 ft	65.6 ft
42000 Btu/h(12306 W)	98.4 ft	65.6 ft
48000 Btu/h(14064 W)	98.4 ft	65.6 ft

● When the length of connection pipe is above 16.4ft, add refrigerant according to the prolonged length of liquid pipe. The additional refrigerant charging amount per meter is different according to the diameter of liquid pipe. See the following sheet.

● Additional refrigerant charging amount = prolonged length of liquid pipe X additional refrigerant charging amount per meter

Additional refrigerant charging amount for R22, R407C, R410A and R134a			
Diameter of connection pipe		Outdoor unit throttle	
Liquid pipe(inch)	Gas pipe(inch)	Cooling only(oz/ft)	Cooling and heating(oz/ft)
Φ0.23	Φ0.37 or Φ0.47	0.53	0.71
Φ0.23 or Φ0.37	Φ0.63 or Φ0.75	0.53	0.71
Φ0.47	Φ0.75 or Φ0.84	1.06	4.23
Φ0.63	Φ1.0 or Φ1.25	2.12	4.23
Φ0.75	/	8.82	8.11
Φ0.84	/	12.34	12.34

Appendix 3: Pipe Expanding Method

⚠ **Note:**

Improper pipe expanding is the main cause of refrigerant leakage.Please expand the pipe according to the following steps:

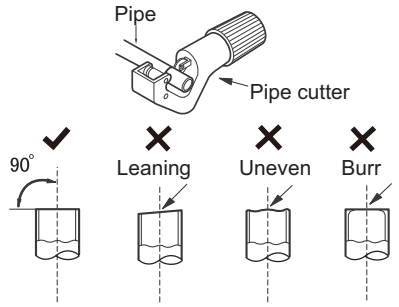

A:Cut the pip
- Confirm the pipe length according to the distance of indoor unit and outdoor unit.
- Cut the required pipe with pipe cutter.

B:Remove the burrs
- Remove the burrs with shaper and prevent the burrs from getting into the pipe.

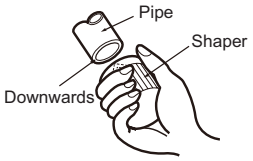

C:Put on suitable insulating pipe

D:Put on the union nut
- Remove the union nut on the indoor connection pipe and outdoor valve; install the union nut on the pipe.

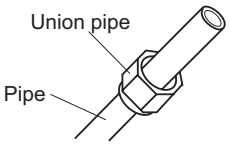

E:Expand the port
- Expand the port with expander.

⚠ **Note:**
- "A" is different according to the diameter, please refer to the sheet below:

Outer diameter(inch)	A(inch)	
	Max	Min
Φ0.23 - 0.25 (1/4")	0.051	0.028
Φ9.52 (3/8”)	0.063	0.039
Φ0.37 - 0.5 (1/2”)	0.071	0.039
Φ0.63 (5/8”)	0.095	0.087

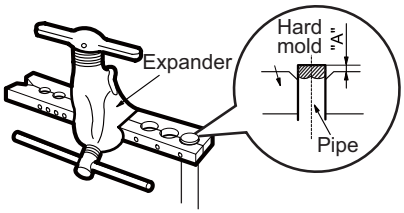

F:Inspection
- Check the quality of expanding port. If there is any blemish, expand the port again according to the steps above.

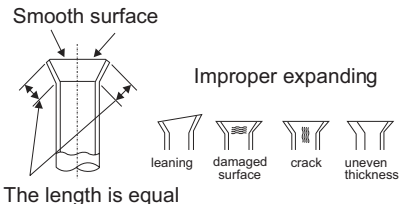

Appendix 4: List of Resistance for Temperature Sensor

Resistance Table of Ambient Temperature Sensor for Indoor and Outdoor (15K)

Temp(°C)	Resistance(kΩ)		Temp(°C)	Resistance(kΩ)		Temp(°C)	Resistance(kΩ)		Temp(°C)	Resistance(kΩ)
-19	138.1		20	18.75		59	3.848		98	1.071
-18	128.6		21	17.93		60	3.711		99	1.039
-17	121.6		22	17.14		61	3.579		100	1.009
-16	115		23	16.39		62	3.454		101	0.98
-15	108.7		24	15.68		63	3.333		102	0.952
-14	102.9		25	15		64	3.217		103	0.925
-13	97.4		26	14.36		65	3.105		104	0.898
-12	92.22		27	13.74		66	2.998		105	0.873
-11	87.35		28	13.16		67	2.896		106	0.848
-10	82.75		29	12.6		68	2.797		107	0.825
-9	78.43		30	12.07		69	2.702		108	0.802
-8	74.35		31	11.57		70	2.611		109	0.779
-7	70.5		32	11.09		71	2.523		110	0.758
-6	66.88		33	10.63		72	2.439		111	0.737
-5	63.46		34	10.2		73	2.358		112	0.717
-4	60.23		35	9.779		74	2.28		113	0.697
-3	57.18		36	9.382		75	2.206		114	0.678
-2	54.31		37	9.003		76	2.133		115	0.66
-1	51.59		38	8.642		77	2.064		116	0.642
0	49.02		39	8.297		78	1.997		117	0.625
1	46.6		40	7.967		79	1.933		118	0.608
2	44.31		41	7.653		80	1.871		119	0.592
3	42.14		42	7.352		81	1.811		120	0.577
4	40.09		43	7.065		82	1.754		121	0.561
5	38.15		44	6.791		83	1.699		122	0.547
6	36.32		45	6.529		84	1.645		123	0.532
7	34.58		46	6.278		85	1.594		124	0.519
8	32.94		47	6.038		86	1.544		125	0.505
9	31.38		48	5.809		87	1.497		126	0.492
10	29.9		49	5.589		88	1.451		127	0.48
11	28.51		50	5.379		89	1.408		128	0.467
12	27.18		51	5.197		90	1.363		129	0.456
13	25.92		52	4.986		91	1.322		130	0.444
14	24.73		53	4.802		92	1.282		131	0.433
15	23.6		54	4.625		93	1.244		132	0.422
16	22.53		55	4.456		94	1.207		133	0.412
17	21.51		56	4.294		95	1.171		134	0.401
18	20.54		57	4.139		96	1.136		135	0.391
19	19.63		58	3.99		97	1.103		136	0.382

Resistance Table of Tube Temperature Sensors for Indoor and Outdoor (20K)

Temp(°C)	Resistance(kΩ)		Temp(°C)	Resistance(kΩ)		Temp(°C)	Resistance(kΩ)		Temp(°C)	Resistance(kΩ)
-19	181.4		20	25.01		59	5.13		98	1.427
-18	171.4		21	23.9		60	4.948		99	1.386
-17	162.1		22	22.85		61	4.773		100	1.346
-16	153.3		23	21.85		62	4.605		101	1.307
-15	145		24	20.9		63	4.443		102	1.269
-14	137.2		25	20		64	4.289		103	1.233
-13	129.9		26	19.14		65	4.14		104	1.198
-12	123		27	18.13		66	3.998		105	1.164
-11	116.5		28	17.55		67	3.861		106	1.131
-10	110.3		29	16.8		68	3.729		107	1.099
-9	104.6		30	16.1		69	3.603		108	1.069
-8	99.13		31	15.43		70	3.481		109	1.039
-7	94		32	14.79		71	3.364		110	1.01
-6	89.17		33	14.18		72	3.252		111	0.983
-5	84.61		34	13.59		73	3.144		112	0.956
-4	80.31		35	13.04		74	3.04		113	0.93
-3	76.24		36	12.51		75	2.94		114	0.904
-2	72.41		37	12		76	2.844		115	0.88
-1	68.79		38	11.52		77	2.752		116	0.856
0	65.37		39	11.06		78	2.663		117	0.833
1	62.13		40	10.62		79	2.577		118	0.811
2	59.08		41	10.2		80	2.495		119	0.77
3	56.19		42	9.803		81	2.415		120	0.769
4	53.46		43	9.42		82	2.339		121	0.746
5	50.87		44	9.054		83	2.265		122	0.729
6	48.42		45	8.705		84	2.194		123	0.71
7	46.11		46	8.37		85	2.125		124	0.692
8	43.92		47	8.051		86	2.059		125	0.674
9	41.84		48	7.745		87	1.996		126	0.658
10	39.87		49	7.453		88	1.934		127	0.64
11	38.01		50	7.173		89	1.875		128	0.623
12	36.24		51	6.905		90	1.818		129	0.607
13	34.57		52	6.648		91	1.736		130	0.592
14	32.98		53	6.403		92	1.71		131	0.577
15	31.47		54	6.167		93	1.658		132	0.563
16	30.04		55	5.942		94	1.609		133	0.549
17	28.68		56	5.726		95	1.561		134	0.535
18	27.39		57	5.519		96	1.515		135	0.521
19	26.17		58	5.32		97	1.47		136	0.509

Resistance Table of Discharge Temperature Sensor for Outdoor(50K)

Temp(°C)	Resistance(kΩ)		Temp(°C)	Resistance(kΩ)		Temp(°C)	Resistance(kΩ)		Temp(°C)	Resistance(kΩ)
-29	853.5		10	98		49	18.34		88	4.75
-28	799.8		11	93.42		50	17.65		89	4.61
-27	750		12	89.07		51	16.99		90	4.47
-26	703.8		13	84.95		52	16.36		91	4.33
-25	660.8		14	81.05		53	15.75		92	4.20
-24	620.8		15	77.35		54	15.17		93	4.08
-23	580.6		16	73.83		55	14.62		94	3.96
-22	548.9		17	70.5		56	14.09		95	3.84
-21	516.6		18	67.34		57	13.58		96	3.73
-20	486.5		19	64.33		58	13.09		97	3.62
-19	458.3		20	61.48		59	12.62		98	3.51
-18	432		21	58.77		60	12.17		99	3.41
-17	407.4		22	56.19		61	11.74		100	3.32
-16	384.5		23	53.74		62	11.32		101	3.22
-15	362.9		24	51.41		63	10.93		102	3.13
-14	342.8		25	49.19		64	10.54		103	3.04
-13	323.9		26	47.08		65	10.18		104	2.96
-12	306.2		27	45.07		66	9.83		105	2.87
-11	289.6		28	43.16		67	9.49		106	2.79
-10	274		29	41.34		68	9.17		107	2.72
-9	259.3		30	39.61		69	8.85		108	2.64
-8	245.6		31	37.96		70	8.56		109	2.57
-7	232.6		32	36.38		71	8.27		110	2.50
-6	220.5		33	34.88		72	7.99		111	2.43
-5	209		34	33.45		73	7.73		112	2.37
-4	198.3		35	32.09		74	7.47		113	2.30
-3	199.1		36	30.79		75	7.22		114	2.24
-2	178.5		37	29.54		76	7.00		115	2.18
-1	169.5		38	28.36		77	6.76		116	2.12
0	161		39	27.23		78	6.54		117	2.07
1	153		40	26.15		79	6.33		118	2.02
2	145.4		41	25.11		80	6.13		119	1.96
3	138.3		42	24.13		81	5.93		120	1.91
4	131.5		43	23.19		82	5.75		121	1.86
5	125.1		44	22.29		83	5.57		122	1.82
6	119.1		45	21.43		84	5.39		123	1.77
7	113.4		46	20.6		85	5.22		124	1.73
8	108		47	19.81		86	5.06		125	1.68
9	102.8		48	19.06		87	4.90		126	1.64

JF00302123

GREE ELECTRIC APPLIANCES,INC.OF ZHUHAI

Add: West Jinji Rd, Qianshan, Zhuhai, Guangdong, China 519070
Tel: (+86-756) 8522218 Fax: (+86-756) 8669426
Email: gree@gree.com.cn Http://www.gree.com

HONG KONG GREE ELECTRIC APPLIANCES SALES LIMITED

Add: Unit 2612,26/F.,Miramar Tower 132 Nathan Road,TST,Kowloon,HK
Tel: (852) 31658898 Fax: (852) 31651029

For product improvement, specifications and appearance in this manual are subject to change without prior notice.